PCB_NAME

# TPD.NT72690.PC722（T）

PCB_TIME

E25508

弹片,C.T972.81,3.5×1.5×2.5mm,T=0.1mm,不锈钢,本色,镀镍,触点镀金,非开模件,V1

NC/导电硅胶,3×2×2.5mm,Black,Silicone Rubber,SMD,Joinset

NC/弹片,C.T972.81,3.5×1.5×2.5mm,T=0.1mm,不锈钢,本色,镀镍,触点镀金,非开模件,V1
弹片,C.T972.81,3.5×1.5×2.5mm,T=0.1mm,不锈钢,本色,镀镍,触点镀金,非开模件,V1

用于U1上

NC/ 导热硅胶垫,22.5×22.5mm,导热硅胶垫,4W/m.k,35HRV,0.5mm,紫红色,3K-400,TP-O,3KS

弹片,C.T972.81,3.5×1.5×2.5mm,T=0.1mm,不锈钢,本色,镀镍,触点镀金,非开模件,V1
NC/弹片,C.T972.81,3.5×1.5×2.5mm,T=0.1mm,不锈钢,本色,镀镍,触点镀金,非开模件,V1
NC/弹片,C.T972.81,3.5×1.5×2.5mm,T=0.1mm,不锈钢,本色,镀镍,触点镀金,非开模件,V1
NC/弹片,C.T972.81,3.5×1.5×2.5mm,T=0.1mm,不锈钢,本色,镀镍,触点镀金,非开模件,V1
NC/弹片,C.T972.81,3.5×1.5×2.5mm,T=0.1mm,不锈钢,本色,镀镍,触点镀金,非开模件,V1
NC/弹片,C.T972.81,3.5×1.5×2.5mm,T=0.1mm,不锈钢,本色,镀镍,触点镀金,非开模件,V1

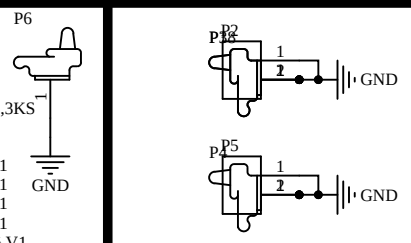


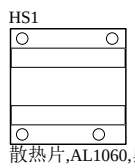


散热片,AL1060,黑色,80×75×10mm,[单面喷涂],7W,PUSH PIN,带6W/m.k 25×25×0.5 导热硅胶垫

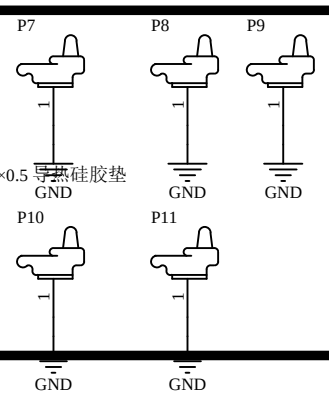


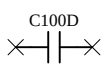


片式陶瓷电容,MC,16V,10uF,±20%,X5R,0805,SMD,TP

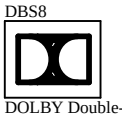

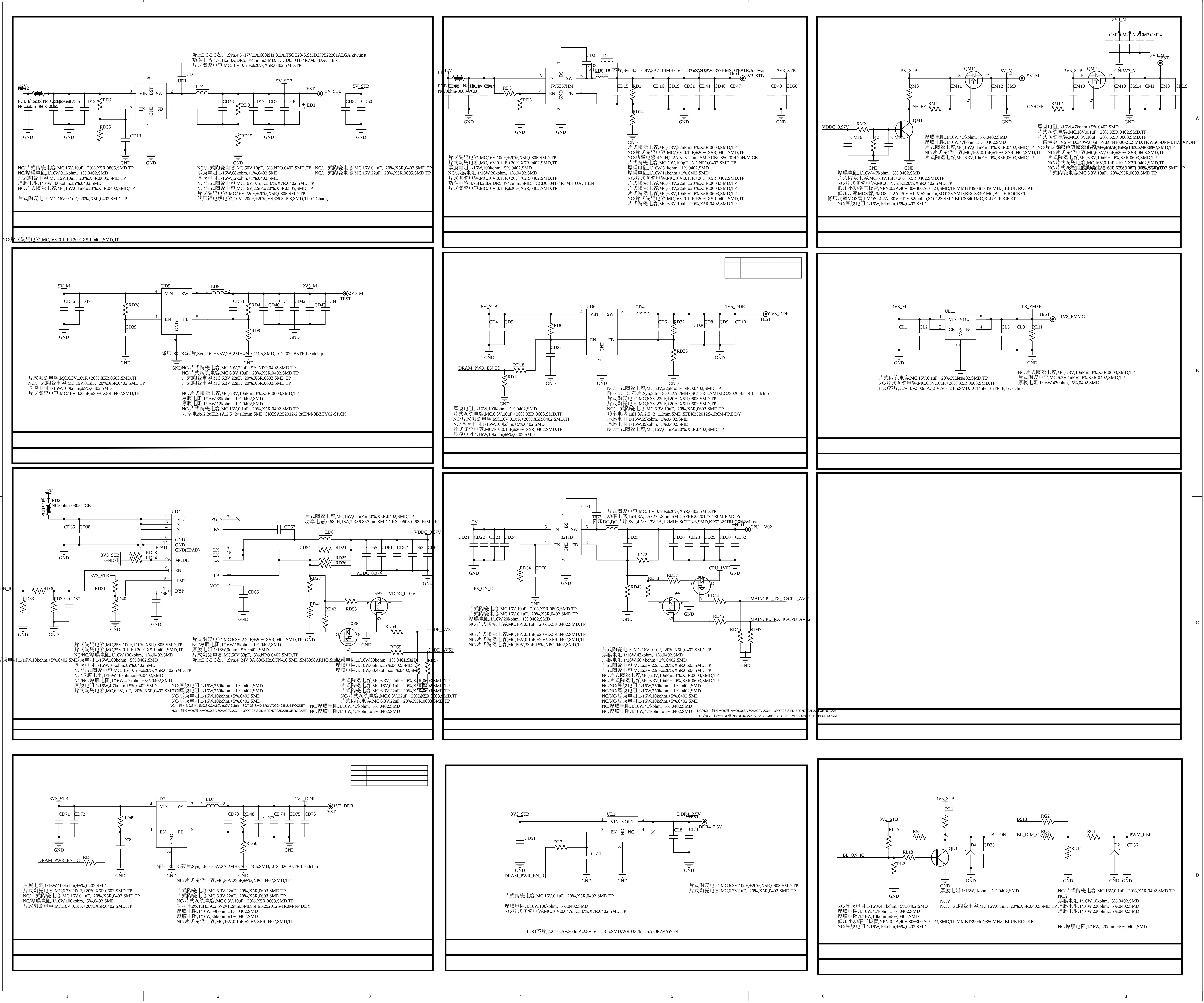
降压DC-DC芯片,Syn,4.5~17V,2A,600kHz,3.2A,TSOT23-6,SMD,KP522201ALGA,kiwiinst
功率电感,4.7uH,2.8A,DR5.8×4.5mm,SMD,HCCD0504T-4R7M,HUACHEN
片式陶瓷电容,MC,16V,0.1uF,±20%,X5R,0402,SMD,TP
12V
RD52
PCB Short (No Component)
NC/0ohm-0603-PCB
UD1
VIN
BST
SW
EN
GND
FB
CD1
LD1
5V_STB
TEST
ED1
GND
NC/片式陶瓷电容,MC,16V,10uF,±20%,X5R,0805,SMD,TP
NC/厚膜电阻,1/16W,9.1kohm,±1%,0402,SMD
片式陶瓷电容,MC,16V,10uF,±20%,X5R,0805,SMD,TP
厚膜电阻,1/16W,100kohm,±5%,0402,SMD
NC/片式陶瓷电容,MC,16V,0.1uF,±20%,X5R,0402,SMD,TP
片式陶瓷电容,MC,16V,0.1uF,±20%,X5R,0402,SMD,TP
NC/片式陶瓷电容,MC,50V,10pF,±5%,NPO,0402,SMD,TP
厚膜电阻,1/16W,68kohm,±1%,0402,SMD
厚膜电阻,1/16W,12kohm,±1%,0402,SMD
NC/片式陶瓷电容,MC,16V,0.1uF,±10%,X7R,0402,SMD,TP
NC/片式陶瓷电容,MC,16V,22uF,±20%,X5R,0805,SMD,TP
片式陶瓷电容,MC,16V,22uF,±20%,X5R,0805,SMD,TP
低压铝电解电容,10V,220uF,±20%,VS,Φ6.3×5.8,SMD,TP-O,Chang
NC/片式陶瓷电容,MC,16V,0.1uF,±20%,X5R,0402,SMD,TP
NC/片式陶瓷电容,MC,16V,22uF,±20%,X5R,0805,SMD,TP
NC/片式陶瓷电容,MC,16V,0.1uF,±20%,X5R,0402,SMD,TP
UD2
降压DC-DC芯片,Syn,4.5～18V,3A,1.14MHz,SOT23-6,SMD,JW5357HMSOTB#TR,Joulwatt
JW5357HM
IN
BS
SW
EN
GND
FB
3V3_STB
TEST
片式陶瓷电容,MC,16V,10uF,±20%,X5R,0805,SMD,TP
片式陶瓷电容,MC,16V,0.1uF,±20%,X5R,0402,SMD,TP
厚膜电阻,1/16W,100kohm,±5%,0402,SMD
NC/厚膜电阻,1/16W,20kohm,±1%,0402,SMD
片式陶瓷电容,MC,16V,0.1uF,±20%,X5R,0402,SMD,TP
功率电感,4.7uH,2.8A,DR5.8×4.5mm,SMD,HCCD0504T-4R7M,HUACHEN
片式陶瓷电容,MC,16V,0.1uF,±20%,X5R,0402,SMD,TP
片式陶瓷电容,MC,6.3V,22uF,±20%,X5R,0603,SMD,TP
NC/片式陶瓷电容,MC,16V,0.1uF,±20%,X5R,0402,SMD,TP
NC/功率电感,4.7uH,2.2A,5×5×2mm,SMD,CKCS5020-4.7uH/M,CK
片式陶瓷电容,MC,50V,100pF,±5%,NPO,0402,SMD,TP
厚膜电阻,1/16W,51kohm,±1%,0402,SMD
厚膜电阻,1/16W,11kohm,±1%,0402,SMD
NC/片式陶瓷电容,MC,16V,0.1uF,±20%,X5R,0402,SMD,TP
片式陶瓷电容,MC,6.3V,22uF,±20%,X5R,0603,SMD,TP
片式陶瓷电容,MC,6.3V,22uF,±20%,X5R,0603,SMD,TP
片式陶瓷电容,MC,6.3V,10uF,±20%,X5R,0603,SMD,TP
NC/片式陶瓷电容,MC,16V,0.1uF,±20%,X5R,0402,SMD,TP
片式陶瓷电容,MC,6.3V,10uF,±20%,X5R,0402,SMD,TP
3V3_M
5V_M
QM11
QM1
QM2
ON/OFF
VDDC_0.97V
厚膜电阻,1/16W,4.7kohm,±5%,0402,SMD
厚膜电阻,1/16W,47kohm,±5%,0402,SMD
片式陶瓷电容,MC,16V,0.1uF,±20%,X5R,0402,SMD,TP
NC/片式陶瓷电容,MC,16V,0.1uF,±10%,X7R,0402,SMD,TP
片式陶瓷电容,MC,6.3V,10uF,±20%,X5R,0603,SMD,TP
厚膜电阻,1/16W,4.7kohm,±5%,0402,SMD
片式陶瓷电容,MC,6.3V,1uF,±20%,X5R,0402,SMD,TP
NC/片式陶瓷电容,MC,6.3V,1uF,±20%,X5R,0402,SMD,TP
低压小功率三极管,NPN,0.2A,40V,30~300,SOT-23,SMD,TP,MMBT3904(f≥350MHz),BLUE ROCKET
低压功率MOS管,PMOS,-4.2A,-30V,±12V,52mohm,SOT-23,SMD,BRCS3401MC,BLUE ROCKET
低压功率MOS管,PMOS,-4.2A,-30V,±12V,52mohm,SOT-23,SMD,BRCS3401MC,BLUE ROCKET
NC/厚膜电阻,1/16W,10kohm,±5%,0402,SMD
厚膜电阻,1/16W,47kohm,±5%,0402,SMD
片式陶瓷电容,MC,16V,0.1uF,±20%,X5R,0402,SMD,TP
片式陶瓷电容,MC,6.3V,10uF,±20%,X5R,0603,SMD,TP
小信号类TVS管,D,340W,80pF,5V,DFN1006-2L,SMD,TP,WS05DPF-BH,WAYON
NC/片式陶瓷电容,MC,6.3V,10uF,±20%,X5R,0603,SMD,TP
片式陶瓷电容,MC,6.3V,10uF,±20%,X5R,0603,SMD,TP
NC/片式陶瓷电容,MC,16V,0.1uF,±10%,X7R,0402,SMD,TP
片式陶瓷电容,MC,6.3V,10uF,±20%,X5R,0603,SMD,TP
5V_M
2V5_M
UD5
降压DC-DC芯片,Syn,2.6～5.5V,2A,2MHz,SOT23-5,SMD,LC2202CB5TR,Leadchip
片式陶瓷电容,MC,6.3V,10uF,±20%,X5R,0603,SMD,TP
NC/片式陶瓷电容,MC,16V,0.1uF,±20%,X5R,0402,SMD,TP
厚膜电阻,1/16W,100kohm,±5%,0402,SMD
片式陶瓷电容,MC,16V,0.22uF,±20%,X5R,0402,SMD,TP
NC/片式陶瓷电容,MC,50V,22pF,±5%,NPO,0402,SMD,TP
NC/片式陶瓷电容,MC,6.3V,10uF,±20%,X5R,0402,SMD,TP
片式陶瓷电容,MC,6.3V,22uF,±20%,X5R,0603,SMD,TP
片式陶瓷电容,MC,6.3V,22uF,±20%,X5R,0603,SMD,TP
NC/片式陶瓷电容,MC,6.3V,10uF,±20%,X5R,0603,SMD,TP
厚膜电阻,1/16W,39kohm,±1%,0402,SMD
厚膜电阻,1/16W,12kohm,±1%,0402,SMD
NC/片式陶瓷电容,MC,16V,0.1uF,±20%,X5R,0402,SMD,TP
功率电感,2.2uH,2.1A,2.5×2×1.2mm,SMD,CKCSA252012-2.2uH/M-9BZTY02-SP,CK
UD6
1V5_DDR
DRAM_PWR_EN_IC
厚膜电阻,1/16W,100kohm,±5%,0402,SMD
片式陶瓷电容,MC,6.3V,10uF,±20%,X5R,0603,SMD,TP
NC/片式陶瓷电容,MC,16V,0.1uF,±20%,X5R,0402,SMD,TP
NC/厚膜电阻,1/16W,100kohm,±5%,0402,SMD
片式陶瓷电容,MC,16V,0.1uF,±20%,X5R,0402,SMD,TP
厚膜电阻,1/16W,10kohm,±5%,0402,SMD
NC/片式陶瓷电容,MC,50V,22pF,±5%,NPO,0402,SMD,TP
降压DC-DC芯片,Syn,2.6～5.5V,2A,2MHz,SOT23-5,SMD,LC2202CB5TR,Leadchip
片式陶瓷电容,MC,6.3V,22uF,±20%,X5R,0603,SMD,TP
片式陶瓷电容,MC,6.3V,22uF,±20%,X5R,0603,SMD,TP
NC/片式陶瓷电容,MC,6.3V,10uF,±20%,X5R,0603,SMD,TP
功率电感,1uH,3A,2.5×2×1.2mm,SMD,SFEK252012S-1R0M-FP,DDY
厚膜电阻,1/16W,59kohm,±1%,0402,SMD
厚膜电阻,1/16W,39kohm,±1%,0402,SMD
NC/片式陶瓷电容,MC,16V,0.1uF,±20%,X5R,0402,SMD,TP
UL11
1.8_EMMC
1V8_EMMC
片式陶瓷电容,MC,16V,0.1uF,±20%,X5R,0402,SMD,TP
NC/片式陶瓷电容,MC,6.3V,10uF,±20%,X5R,0603,SMD,TP
LDO芯片,2.7~10V,500mA,1.8V,SOT23-5,SMD,LC1458CB5TR18,Leadchip
NC/片式陶瓷电容,MC,6.3V,10uF,±20%,X5R,0603,SMD,TP
片式陶瓷电容,MC,6.3V,1uF,±20%,X5R,0402,SMD,TP
厚膜电阻,1/16W,470ohm,±5%,0402,SMD
UD4
PCB短路
NC/0ohm-0805-PCB
PS_ON_IC
VDDC_0.97V
CODE_AVS1
CODE_AVS2
片式陶瓷电容,MC,16V,0.1uF,±20%,X5R,0402,SMD,TP
功率电感,0.68uH,16A,7.3×6.8×3mm,SMD,CKST0603-0.68uH/M,CK
片式陶瓷电容,MC,25V,10uF,±10%,X5R,0805,SMD,TP
片式陶瓷电容,MC,25V,0.1uF,±20%,X5R,0402,SMD,TP
NC/NC/厚膜电阻,1/16W,100kohm,±1%,0402,SMD
厚膜电阻,1/16W,100kohm,±5%,0402,SMD
厚膜电阻,1/16W,10kohm,±5%,0402,SMD
NC/片式陶瓷电容,MC,16V,0.1uF,±20%,X5R,0402,SMD,TP
NC/厚膜电阻,1/16W,10kohm,±1%,0402,SMD
NC/NC/厚膜电阻,1/16W,4.7kohm,±5%,0402,SMD
厚膜电阻,1/16W,4.7kohm,±5%,0402,SMD
片式陶瓷电容,MC,6.3V,1uF,±20%,X5R,0402,SMD,TP
厚膜电阻,1/16W,10kohm,±5%,0402,SMD
片式陶瓷电容,MC,6.3V,2.2uF,±20%,X5R,0402,SMD,TP
NC/厚膜电阻,1/16W,18kohm,±1%,0402,SMD
厚膜电阻,1/16W,0ohm,±5%,0402,SMD
片式陶瓷电容,MC,50V,33pF,±5%,NPO,0402,SMD,TP
降压DC-DC芯片,Syn,4~24V,8A,600kHz,QFN-16,SMD,SM8398ARHQ,Silergy
NC/厚膜电阻,1/16W,750kohm,±1%,0402,SMD
NC/厚膜电阻,1/16W,750kohm,±1%,0402,SMD
NC/厚膜电阻,1/16W,10kohm,±5%,0402,SMD
NC/厚膜电阻,1/16W,10kohm,±5%,0402,SMD
NC/小信号MOS管,NMOS,0.3A,60V,±20V,2.3ohm,SOT-23,SMD,BR2N7002K2,BLUE ROCKET
NC/小信号MOS管,NMOS,0.3A,60V,±20V,2.3ohm,SOT-23,SMD,BR2N7002K2,BLUE ROCKET
厚膜电阻,1/16W,39kohm,±1%,0402,SMD
厚膜电阻,1/16W,0ohm,±5%,0402,SMD
厚膜电阻,1/16W,60.4kohm,±1%,0402,SMD
片式陶瓷电容,MC,6.3V,22uF,±20%,X5R,0603,SMD,TP
片式陶瓷电容,MC,16V,0.1uF,±20%,X5R,0402,SMD,TP
片式陶瓷电容,MC,6.3V,22uF,±20%,X5R,0603,SMD,TP
NC/片式陶瓷电容,MC,6.3V,22uF,±20%,X5R,0603,SMD,TP
片式陶瓷电容,MC,6.3V,22uF,±20%,X5R,0603,SMD,TP
NC/厚膜电阻,1/16W,4.7kohm,±5%,0402,SMD
NC/厚膜电阻,1/16W,4.7kohm,±5%,0402,SMD
UD3
3211B
CPU_1V02
MAINCPU_TX_IC/CPU_AVS1
MAINCPU_RX_IC/CPU_AVS2
片式陶瓷电容,MC,16V,0.1uF,±20%,X5R,0402,SMD,TP
功率电感,1uH,3A,2.5×2×1.2mm,SMD,SFEK252012S-1R0M-FP,DDY
降压DC-DC芯片,Syn,4.5～17V,3A,1.2MHz,SOT23-6,SMD,KP5232 ... kiwiinst
片式陶瓷电容,MC,16V,10uF,±20%,X5R,0805,SMD,TP
片式陶瓷电容,MC,16V,0.1uF,±20%,X5R,0402,SMD,TP
厚膜电阻,1/16W,20kohm,±1%,0402,SMD
NC/片式陶瓷电容,MC,16V,0.1uF,±20%,X5R,0402,SMD,TP
NC/片式陶瓷电容,MC,16V,0.1uF,±20%,X5R,0402,SMD,TP
NC/片式陶瓷电容,MC,16V,0.1uF,±20%,X5R,0402,SMD,TP
NC/片式陶瓷电容,MC,50V,33pF,±5%,NPO,0402,SMD,TP
片式陶瓷电容,MC,16V,0.1uF,±20%,X5R,0402,SMD,TP
厚膜电阻,1/16W,43kohm,±1%,0402,SMD
厚膜电阻,1/16W,60.4kohm,±1%,0402,SMD
片式陶瓷电容,MC,6.3V,22uF,±20%,X5R,0603,SMD,TP
片式陶瓷电容,MC,6.3V,22uF,±20%,X5R,0603,SMD,TP
NC/片式陶瓷电容,MC,6.3V,10uF,±20%,X5R,0603,SMD,TP
NC/片式陶瓷电容,MC,6.3V,10uF,±20%,X5R,0603,SMD,TP
NC/NC/厚膜电阻,1/16W,750kohm,±1%,0402,SMD
NC/NC/厚膜电阻,1/16W,750kohm,±1%,0402,SMD
NC/NC/厚膜电阻,1/16W,10kohm,±5%,0402,SMD
NC/NC/厚膜电阻,1/16W,10kohm,±5%,0402,SMD
NC/厚膜电阻,1/16W,4.7kohm,±5%,0402,SMD
NC/厚膜电阻,1/16W,4.7kohm,±5%,0402,SMD
NC/NC/小信号MOS管,NMOS,0.3A,60V,±20V,2.3ohm,SOT-23,SMD,BR2N7002K2,BLUE ROCKET
NC/NC/小信号MOS管,NMOS,0.3A,60V,±20V,2.3ohm,SOT-23,SMD,BR2N7002K2,BLUE ROCKET
UD7
1V2_DDR
厚膜电阻,1/16W,100kohm,±5%,0402,SMD
片式陶瓷电容,MC,6.3V,10uF,±20%,X5R,0603,SMD,TP
NC/片式陶瓷电容,MC,16V,0.1uF,±20%,X5R,0402,SMD,TP
NC/厚膜电阻,1/16W,100kohm,±5%,0402,SMD
片式陶瓷电容,MC,16V,0.1uF,±20%,X5R,0402,SMD,TP
降压DC-DC芯片,Syn,2.6～5.5V,2A,2MHz,SOT23-5,SMD,LC2202CB5TR,Leadchip
NC/片式陶瓷电容,MC,50V,22pF,±5%,NPO,0402,SMD,TP
片式陶瓷电容,MC,6.3V,22uF,±20%,X5R,0603,SMD,TP
片式陶瓷电容,MC,6.3V,22uF,±20%,X5R,0603,SMD,TP
NC/片式陶瓷电容,MC,6.3V,10uF,±20%,X5R,0603,SMD,TP
功率电感,1uH,3A,2.5×2×1.2mm,SMD,SFEK252012S-1R0M-FP,DDY
厚膜电阻,1/16W,59kohm,±1%,0402,SMD
厚膜电阻,1/16W,56kohm,±1%,0402,SMD
NC/片式陶瓷电容,MC,16V,0.1uF,±20%,X5R,0402,SMD,TP
UL1
DDR4_2.5V
片式陶瓷电容,MC,16V,0.1uF,±20%,X5R,0402,SMD,TP
厚膜电阻,1/16W,100kohm,±5%,0402,SMD
NC/片式陶瓷电容,MC,16V,0.047uF,±10%,X7R,0402,SMD,TP
LDO芯片,2.2～5.5V,300mA,2.5V,SOT23-5,SMD,WR0332M-25A50R,WAYON
片式陶瓷电容,MC,6.3V,10uF,±20%,X5R,0603,SMD,TP
片式陶瓷电容,MC,6.3V,1uF,±20%,X5R,0402,SMD,TP
BL_ON_IC
BL_ON
BS13
BL_DIM_OUT_IC
PWM_REF
QL3
厚膜电阻,1/16W,1kohm,±5%,0402,SMD
NC/?
NC/片式陶瓷电容,MC,16V,0.1uF,±20%,X5R,0402,SMD,TP
NC/厚膜电阻,1/16W,4.7kohm,±5%,0402,SMD
厚膜电阻,1/16W,4.7kohm,±5%,0402,SMD
厚膜电阻,1/16W,10kohm,±5%,0402,SMD
低压小功率三极管,NPN,0.2A,40V,30~300,SOT-23,SMD,TP,MMBT3904(f≥350MHz),BLUE ROCKET
NC/厚膜电阻,1/16W,10kohm,±5%,0402,SMD
NC/片式陶瓷电容,MC,16V,0.1uF,±20%,X5R,0402,SMD,TP
NC/?
厚膜电阻,1/16W,10kohm,±5%,0402,SMD
厚膜电阻,1/16W,220ohm,±5%,0402,SMD
厚膜电阻,1/16W,220ohm,±5%,0402,SMD
NC/厚膜电阻,1/16W,220ohm,±5%,0402,SMD

NT72564
CI/TS
NT72690/72564
USB & GPIO
NT72690/72564
STBC
NT72690/72564
HDMI
NT72690/72564
TV_ADC/DAC
NT72690/72564
LVDS/VX1
NT72690/72564
AU_ADC/DAC
SIF

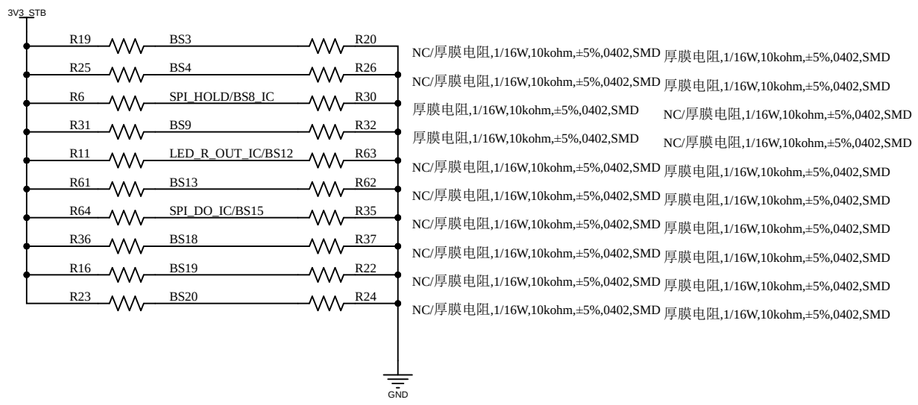


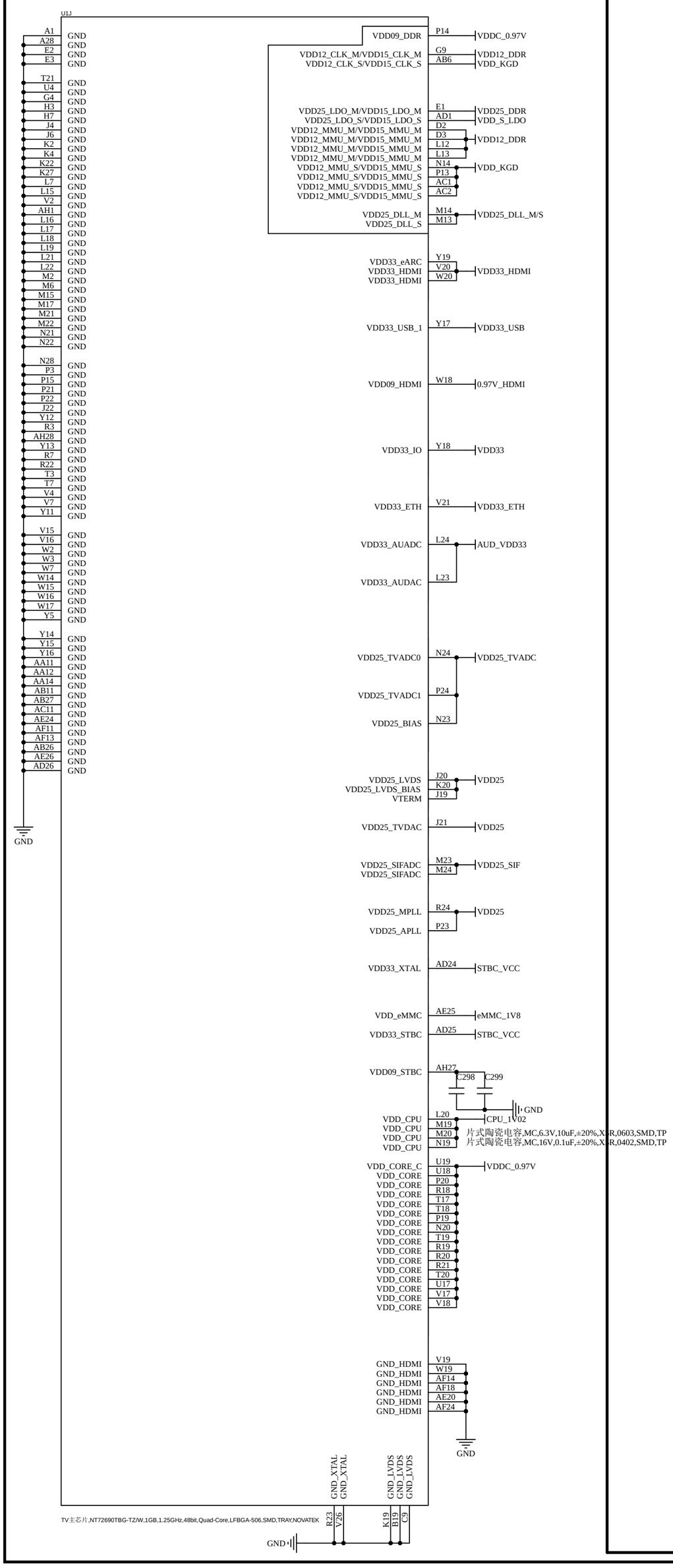


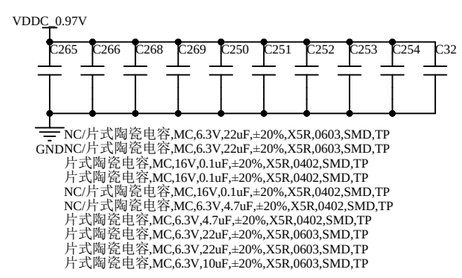


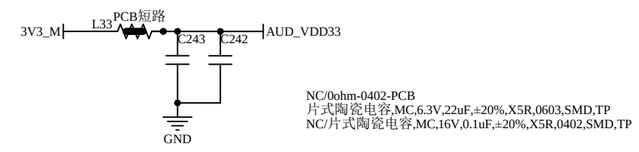


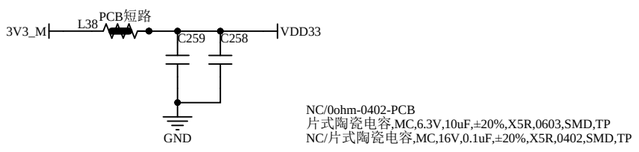


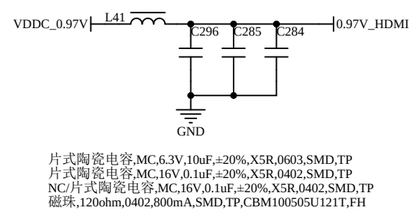


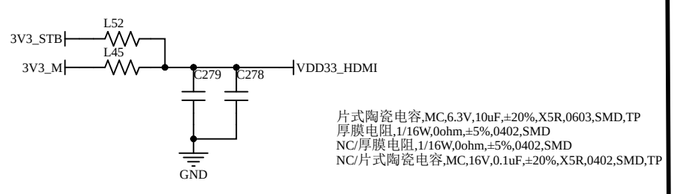


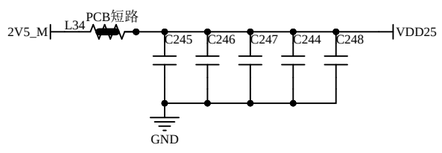


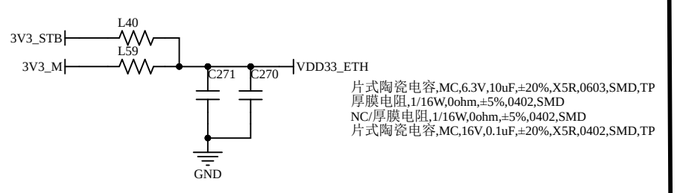


NC/0ohm-0603-PCB
片式陶瓷电容,MC,6.3V,22uF,±20%,X5R,0603,SMD,TP
片式陶瓷电容,MC,16V,0.1uF,±20%,X5R,0402,SMD,TP
NC/片式陶瓷电容,MC,16V,0.1uF,±20%,X5R,0402,SMD,TP
小信号类TVS管,D,70W,13pF,3.3V,DFN1006-2L,SMD,TP,WE3.3DF-B,WAYON
片式陶瓷电容,MC,6.3V,4.7uF,±20%,X5R,0402,SMD,TP

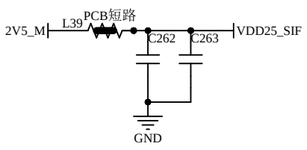


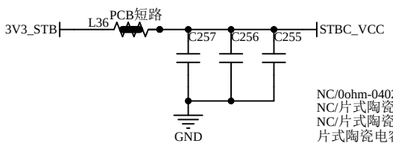


NC/0ohm-0402-PCB
NC/片式陶瓷电容,MC,16V,0.1uF,±20%,X5R,0402,SMD,TP
片式陶瓷电容,MC,6.3V,4.7uF,±20%,X5R,0402,SMD,TP

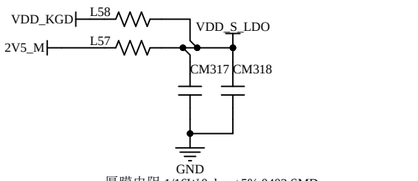


厚膜电阻,1/16W,0ohm,±5%,0402,SMD
NC/厚膜电阻,1/16W,0ohm,±5%,0402,SMD
片式陶瓷电容,MC,6.3V,4.7uF,±20%,X5R,0402,SMD,TP
片式陶瓷电容,MC,16V,0.1uF,±20%,X5R,0402,SMD,TP

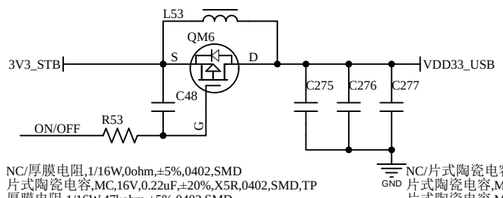


NC/厚膜电阻,1/16W,0ohm,±5%,0402,SMD
片式陶瓷电容,MC,16V,0.22uF,±20%,X5R,0402,SMD,TP
厚膜电阻,1/16W,47kohm,±5%,0402,SMD
低压功率MOS管,PMOS,-4.2A,-30V,±12V,52mohm,SOT-23,SMD,BRCS3401MC,BLUE ROCKET
NC/片式陶瓷电容,MC,6.3V,10uF,±20%,X5R,0603,SMD,TP
片式陶瓷电容,MC,16V,0.1uF,±20%,X5R,0402,SMD,TP
片式陶瓷电容,MC,6.3V,22uF,±20%,X5R,0603,SMD,TP

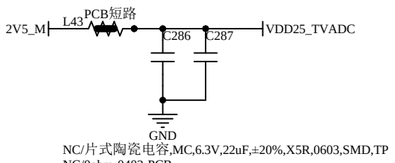


NC/片式陶瓷电容,MC,6.3V,22uF,±20%,X5R,0603,SMD,TP
NC/0ohm-0402-PCB
片式陶瓷电容,MC,16V,0.1uF,±20%,X5R,0402,SMD,TP

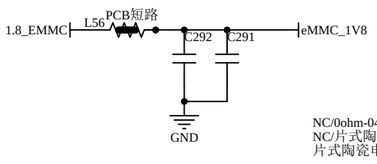


NC/0ohm-0402-PCB
NC/片式陶瓷电容,MC,16V,0.1uF,±20%,X5R,0402,SMD,TP
片式陶瓷电容,MC,6.3V,22uF,±20%,X5R,0603,SMD,TP

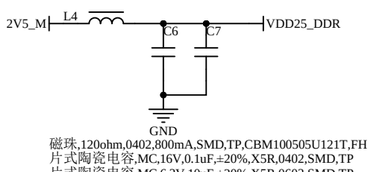


磁珠,120ohm,0402,800mA,SMD,TP,CBM100505U121T,FH
片式陶瓷电容,MC,16V,0.1uF,±20%,X5R,0402,SMD,TP
片式陶瓷电容,MC,6.3V,10uF,±20%,X5R,0603,SMD,TP

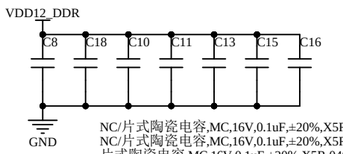


NC/片式陶瓷电容,MC,16V,0.1uF,±20%,X5R,0402,SMD,TP
NC/片式陶瓷电容,MC,16V,0.1uF,±20%,X5R,0402,SMD,TP
片式陶瓷电容,MC,16V,0.1uF,±20%,X5R,0402,SMD,TP
NC/片式陶瓷电容,MC,6.3V,22uF,±20%,X5R,0603,SMD,TP
片式陶瓷电容,MC,6.3V,10uF,±20%,X5R,0603,SMD,TP
片式陶瓷电容,MC,6.3V,10uF,±20%,X5R,0603,SMD,TP
NC/片式陶瓷电容,MC,6.3V,10uF,±20%,X5R,0603,SMD,TP

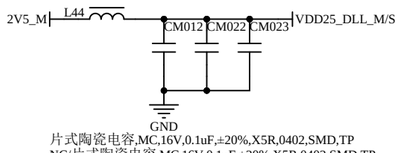


片式陶瓷电容,MC,16V,0.1uF,±20%,X5R,0402,SMD,TP
NC/片式陶瓷电容,MC,16V,0.1uF,±20%,X5R,0402,SMD,TP
片式陶瓷电容,MC,16V,0.1uF,±20%,X5R,0402,SMD,TP
磁珠,120ohm,0402,800mA,SMD,TP,CBM100505U121T,FH

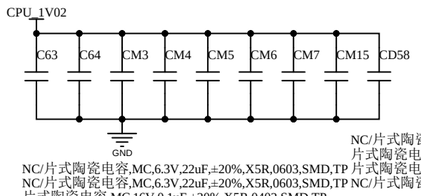


NC/片式陶瓷电容,MC,16V,0.1uF,±20%,X5R,0402,SMD,TP
片式陶瓷电容,MC,6.3V,4.7uF,±20%,X5R,0402,SMD,TP
NC/片式陶瓷电容,MC,6.3V,22uF,±20%,X5R,0603,SMD,TP
NC/片式陶瓷电容,MC,6.3V,22uF,±20%,X5R,0603,SMD,TP
片式陶瓷电容,MC,16V,0.1uF,±20%,X5R,0402,SMD,TP
片式陶瓷电容,MC,16V,0.1uF,±20%,X5R,0402,SMD,TP
片式陶瓷电容,MC,16V,0.1uF,±20%,X5R,0402,SMD,TP

NAMING RULE
CA DDR4/DDR3
DQ DDR4_16BITS/DDR3 16BITS
U1A
DDRM_A0 DDRM_A1 DDRM_A2 DDRM_A3 DDRM_A4 DDRM_A5 DDRM_A6 DDRM_A7 DDRM_A8 DDRM_A9 DDRM_A10 DDRM_A11 DDRM_A12 DDRM_A13
MA0/MA2 MA1/MRASN MA2/MA13 MA3/MA15 MA4/MWEN MA5/MA6 MA6/MA5 MA7/MA11 MA8/MA7 MA9/MA1 MA10/MCASN MA11/MA9 MA12/MA12 MA13/MA14
MDQ0/MDQ2 MDQ1 MDQ2/MDQ0 MDQ3 MDQ4/MDQ6 MDQ5/MDQ7 MDQ6/MDQ4 MDQ7/MDQ5
MDQ8/MDQ15 MDQ9/MDQ12 MDQ10/MDQ13 MDQ11/MDQ14 MDQ12/MDQ11 MDQ13/MDQ10 MDQ14/MDQ9 MDQ15/MDQ8
DDRM_DQ0 … DDRM_DQ15
MTEN/MA8 MACTN/MA0 MBA0/MA3 MBA1/MA4 MBG0/MBA0
DDRM_ACTN DDRM_BA0 DDRM_BA1 DDRM_BG0
MCKE/MCKE MCASN/MBA1 MRASN/MA10 MODT/MODT MWEN/MBA2
DDRM_CKE DDRM_CASN DDRM_RASN DDRM_ODT DDRM_WEN
MCLK1t/MCLK1 MCLK1c/MCLK1N
DDRM_CLK1T DDRM_CLK1C
MCS0 DDRM_CS0
MRST MMUM_RSTN
MDQS0t/MDQS0 MDQS0c/MDQS0B MDQS1t/MDQS1 MDQS1c/MDQS1B
DDRM_DQS0T DDRM_DQS0C DDRM_DQS1T DDRM_DQS1C
MDM0 MDM1 DDRM_DM0 DDRM_DM1
M_DDR_LDOOUT
Suspend_M/GPI_20 SUSPEND_M TEST
TV主芯片,NT72690TBG-TZ/W,1GB,1.25GHz,48bit,Quad-Core,LFBGA-506,SMD,TRAY,NOVATEK
VDD_KGD 1V5_DDR 1V2_DDR BD5 BD2
CD922 CD923 CD924 CD113 CD108 CD103 CD920
片式陶瓷电容,MC,16V,0.1uF,±20%,X5R,0402,SMD,TP
片式陶瓷电容,MC,6.3V,1uF,±20%,X5R,0402,SMD,TP
片式陶瓷电容,MC,6.3V,4.7uF,±20%,X5R,0402,SMD,TP
片式陶瓷电容,MC,16V,0.1uF,±20%,X5R,0402,SMD,TP
片式陶瓷电容,MC,6.3V,4.7uF,±20%,X5R,0402,SMD,TP
片式陶瓷电容,MC,6.3V,1uF,±20%,X5R,0402,SMD,TP
NC/片式陶瓷电容,MC,16V,0.1uF,±20%,X5R,0402,SMD,TP
磁珠,120ohm,0603,2A,SMD,TP,HCB1608KF-121T20,TAI-TECH
NC/磁珠,120ohm,0603,3A,SMD,TP,HCB1608KF-121T30,TAI-TECH
CD114 CD111 CD100 CD101
NC/片式陶瓷电容,MC,16V,0.1uF,±20%,X5R,0402,SMD,TP
片式陶瓷电容,MC,16V,0.1uF,±20%,X5R,0402,SMD,TP
片式陶瓷电容,MC,6.3V,22uF,±20%,X5R,0603,SMD,TP
片式陶瓷电容,MC,6.3V,10uF,±20%,X5R,0603,SMD,TP
A2_5V_KGD BD7 DDR4_2.5V CD118 CD119 CD120
NC/片式陶瓷电容,MC,16V,0.1uF,±20%,X5R,0402,SMD,TP
NC/片式陶瓷电容,MC,16V,0.1uF,±20%,X5R,0402,SMD,TP
NC/片式陶瓷电容,MC,6.3V,4.7uF,±20%,X5R,0402,SMD,TP
NC/磁珠,120ohm,0603,3A,SMD,TP,HCB1608KF-121T30,TAI-TECH
DDRF_SCKE R755 DDRS_CKE0 R1686
厚膜电阻,1/16W,1.2kohm,±1%,0402,SMD
厚膜电阻,1/16W,1kohm,±1%,0402,SMD
U1B
NT72690/72564
ZQ1 ZQ0 SRST_DDR RST_KGD CKE_KGD VREF_KGD
VDD12_KGD/VDD15_KGD
VDD25_KGD(NC)
Suspend_S/GPI_19 SUSPEND_S TEST
S_DDR_LDOOUT TP166 TEST TS
R76 R77 R78 R79 R80 CD239 CD240 VDD_KGD DDRS_RSTN DDRS_CKE0 A2_5V_KGD
TV主芯片,NT72690TBG-8H,Multi-Core,TFBGA-506,SMD,TRAY,PN:NT72690TBG-8H2K,Novatek,MOKA
NC/厚膜电阻,1/16W,0ohm,±5%,0402,SMD
厚膜电阻,1/16W,1kohm,±1%,0402,SMD
厚膜电阻,1/16W,1kohm,±1%,0402,SMD
厚膜电阻,1/16W,240ohm,±1%,0402,SMD
厚膜电阻,1/16W,240ohm,±1%,0402,SMD
片式陶瓷电容,MC,16V,0.1uF,±20%,X5R,0402,SMD,TP
片式陶瓷电容,MC,50V,1000pF,±10%,X7R,0402,SMD,TP
MMU_VPP VDD12_DDR BD3 PCB短路 1V2_DDR NC/0ohm-0805-PCB
CD041 CD023 CD045 CD046 CD044 CD022 CD020 CD024 CD021
U24
DDR芯片,DDR4,3200MHz,16bit,512MB,4Gb,FBGA-96,SMD,TRAY,K4A4G165WG-BCWE,Samsung
NC/厚膜电阻,1/16W,1kohm,±1%,0402,SMD
NC/厚膜电阻,1/16W,1kohm,±1%,0402,SMD
NC/片式陶瓷电容,MC,50V,10pF,±5%,NPO,0402,SMD,TP
RD2418 RD2421 CD1104 RD1687
CS_N RESET_N WE_N/A14 CAS_N/A15 RAS_N/A16 CKE ODT PAR ACT_N ALERT_N CK_C CK_T BG0 BA0 BA1
A0 A1 A2 A3 A4 A5 A6 A7 A8 A9 A10/AP A11 A12/BC_N A13
VREFCA ZQ TEN NC
DQU7 DQU6 DQU5 DQU4 DQU3 DQU2 DQU1 DQU0 DMU_N/DBIU_N DQSU_C DQSU_T
DQL7 DQL6 DQL5 DQL4 DQL3 DQL2 DQL1 DQL0 DML_N/DBIL_N DQSL_C DQSL_T
厚膜电阻,1/16W,100ohm,±1%,0402,SMD
片式陶瓷电容,MC,6.3V,4.7uF,±20%,X5R,0402,SMD,TP
片式陶瓷电容,MC,6.3V,4.7uF,±20%,X5R,0402,SMD,TP
片式陶瓷电容,MC,6.3V,1uF,±20%,X5R,0402,SMD,TP
片式陶瓷电容,MC,16V,0.1uF,±20%,X5R,0402,SMD,TP
片式陶瓷电容,MC,16V,0.1uF,±20%,X5R,0402,SMD,TP
片式陶瓷电容,MC,16V,0.1uF,±20%,X5R,0402,SMD,TP
片式陶瓷电容,MC,16V,0.1uF,±20%,X5R,0402,SMD,TP
NC/片式陶瓷电容,MC,16V,0.1uF,±20%,X5R,0402,SMD,TP
NC/片式陶瓷电容,MC,6.3V,4.7uF,±20%,X5R,0402,SMD,TP
DDRF_MCKE_IC RD716 DDRM_CKE RD1664
厚膜电阻,1/16W,1.8kohm,±1%,0402,SMD
厚膜电阻,1/16W,1kohm,±1%,0402,SMD
DDR4_2.5V BD166 PCB短路 MMU_VPP CD200 CD201 CD203 CD204
NC/0ohm-0402-PCB
片式陶瓷电容,MC,6.3V,4.7uF,±20%,X5R,0402,SMD,TP
片式陶瓷电容,MC,16V,0.1uF,±20%,X5R,0402,SMD,TP
片式陶瓷电容,MC,6.3V,4.7uF,±20%,X5R,0402,SMD,TP
片式陶瓷电容,MC,16V,0.1uF,±20%,X5R,0402,SMD,TP
VDD12_DDR RD16 RD122 CD1100 CD1101 RD13 VREF_1
厚膜电阻,1/16W,1kohm,±1%,0402,SMD
厚膜电阻,1/16W,1kohm,±1%,0402,SMD
片式陶瓷电容,MC,16V,0.1uF,±20%,X5R,0402,SMD,TP
片式陶瓷电容,MC,50V,1000pF,±10%,X7R,0402,SMD,TP
厚膜电阻,1/16W,240ohm,±1%,0402,SMD
DDRF_RSTN R761 DDRS_RSTN R760
厚膜电阻,1/16W,12kohm,±1%,0402,SMD
厚膜电阻,1/16W,10kohm,±1%,0402,SMD
MMUM_RSTN RD10 DDRF_RSTN RD756 DDRM_RSTN RD757
NC/厚膜电阻,1/16W,0ohm,±5%,0402,SMD
厚膜电阻,1/16W,20kohm,±1%,0402,SMD
厚膜电阻,1/16W,12kohm,±1%,0402,SMD

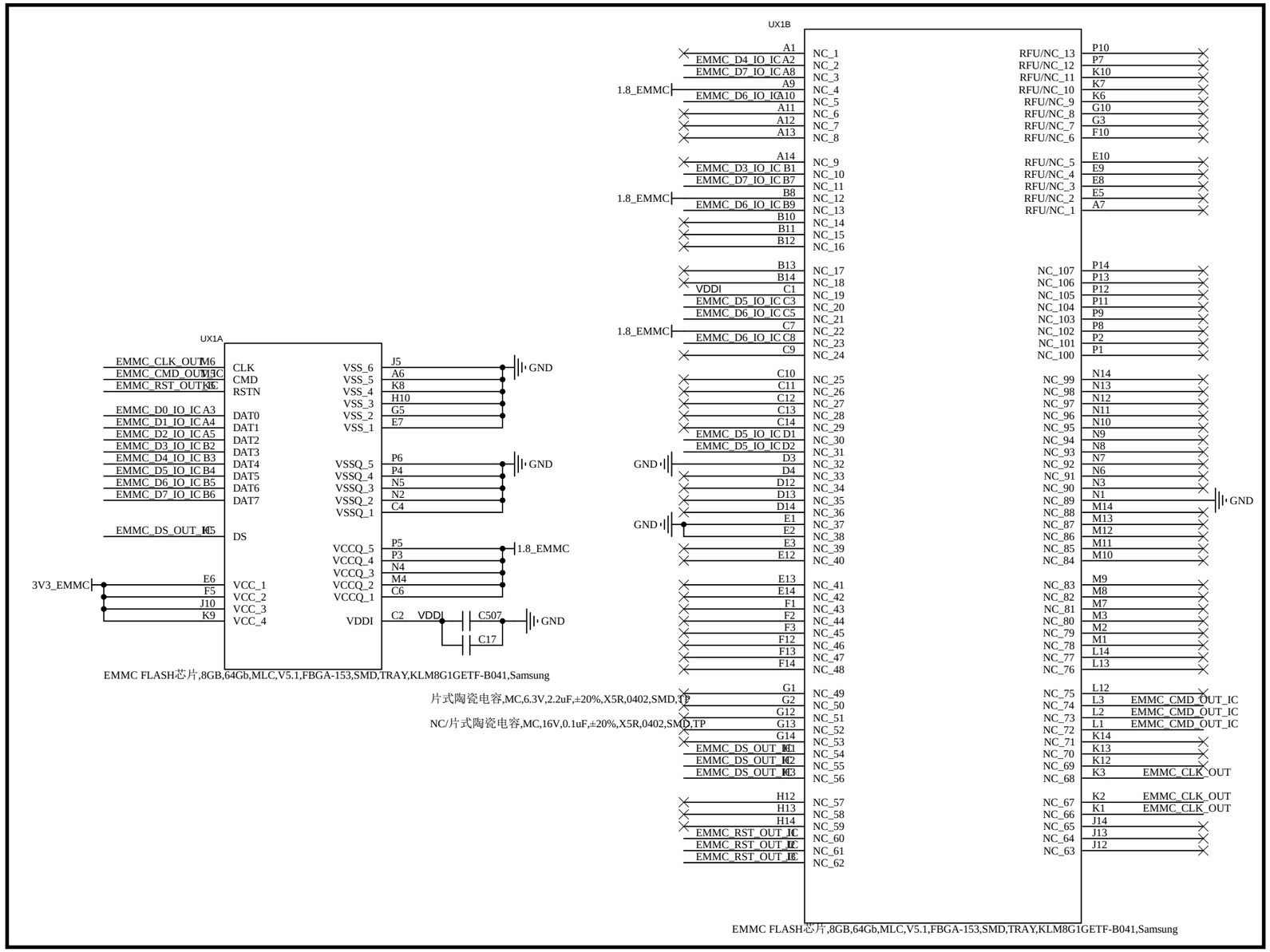
UX1A
EMMC_CLK_OUT_IC M6
EMMC_CMD_OUT_IC L13
EMMC_RST_OUT_IC K6
EMMC_D0_IO_IC A3
EMMC_D1_IO_IC A4
EMMC_D2_IO_IC A5
EMMC_D3_IO_IC B2
EMMC_D4_IO_IC B3
EMMC_D5_IO_IC B4
EMMC_D6_IO_IC B5
EMMC_D7_IO_IC B6
EMMC_DS_OUT_IC H5
3V3_EMMC
E6
F5
J10
K9
CLK
CMD
RSTN
DAT0
DAT1
DAT2
DAT3
DAT4
DAT5
DAT6
DAT7
DS
VCC_1
VCC_2
VCC_3
VCC_4
VSS_6
VSS_5
VSS_4
VSS_3
VSS_2
VSS_1
VSSQ_5
VSSQ_4
VSSQ_3
VSSQ_2
VSSQ_1
VCCQ_5
VCCQ_4
VCCQ_3
VCCQ_2
VCCQ_1
VDDI
J5
A6
K8
H10
G5
E7
P6
P4
N5
N2
C4
P5
P3
N4
M4
C6
C2
VDDI
C507
C17
GND
1.8_EMMC
EMMC FLASH芯片,8GB,64Gb,MLC,V5.1,FBGA-153,SMD,TRAY,KLM8G1GETF-B041,Samsung
片式陶瓷电容,MC,6.3V,2.2uF,±20%,X5R,0402,SMD,TP
NC/片式陶瓷电容,MC,16V,0.1uF,±20%,X5R,0402,SMD,TP
UX1B
A1
EMMC_D4_IO_IC A2
EMMC_D7_IO_IC A8
A9
EMMC_D6_IO_IC A10
A11
A12
A13
A14
EMMC_D3_IO_IC B1
EMMC_D7_IO_IC B7
B8
EMMC_D6_IO_IC B9
B10
B11
B12
B13
B14
VDDI C1
EMMC_D5_IO_IC C3
EMMC_D6_IO_IC C5
C7
EMMC_D6_IO_IC C8
C9
C10
C11
C12
C13
C14
EMMC_D5_IO_IC D1
EMMC_D5_IO_IC D2
D3
D4
D12
D13
D14
E1
E2
E3
E12
E13
E14
F1
F2
F3
F12
F13
F14
G1
G2
G12
G13
G14
EMMC_DS_OUT_IC H1
EMMC_DS_OUT_IC H2
EMMC_DS_OUT_IC H3
H12
H13
H14
EMMC_RST_OUT_IC
EMMC_RST_OUT_IC
EMMC_RST_OUT_IC
NC_1
NC_2
NC_3
NC_4
NC_5
NC_6
NC_7
NC_8
NC_9
NC_10
NC_11
NC_12
NC_13
NC_14
NC_15
NC_16
NC_17
NC_18
NC_19
NC_20
NC_21
NC_22
NC_23
NC_24
NC_25
NC_26
NC_27
NC_28
NC_29
NC_30
NC_31
NC_32
NC_33
NC_34
NC_35
NC_36
NC_37
NC_38
NC_39
NC_40
NC_41
NC_42
NC_43
NC_44
NC_45
NC_46
NC_47
NC_48
NC_49
NC_50
NC_51
NC_52
NC_53
NC_54
NC_55
NC_56
NC_57
NC_58
NC_59
NC_60
NC_61
NC_62
RFU/NC_13
RFU/NC_12
RFU/NC_11
RFU/NC_10
RFU/NC_9
RFU/NC_8
RFU/NC_7
RFU/NC_6
RFU/NC_5
RFU/NC_4
RFU/NC_3
RFU/NC_2
RFU/NC_1
NC_107
NC_106
NC_105
NC_104
NC_103
NC_102
NC_101
NC_100
NC_99
NC_98
NC_97
NC_96
NC_95
NC_94
NC_93
NC_92
NC_91
NC_90
NC_89
NC_88
NC_87
NC_86
NC_85
NC_84
NC_83
NC_82
NC_81
NC_80
NC_79
NC_78
NC_77
NC_76
NC_75
NC_74
NC_73
NC_72
NC_71
NC_70
NC_69
NC_68
NC_67
NC_66
NC_65
NC_64
NC_63
P10
P7
K10
K7
K6
G10
G3
F10
E10
E9
E8
E5
A7
P14
P13
P12
P11
P9
P8
P2
P1
N14
N13
N12
N11
N10
N9
N8
N7
N6
N3
N1
M14
M13
M12
M11
M10
M9
M8
M7
M3
M2
M1
L14
L13
L12
L3 EMMC_CMD_OUT_IC
L2 EMMC_CMD_OUT_IC
L1 EMMC_CMD_OUT_IC
K14
K13
K12
K3 EMMC_CLK_OUT
K2 EMMC_CLK_OUT
K1 EMMC_CLK_OUT
J14
J13
J12
EMMC FLASH芯片,8GB,64Gb,MLC,V5.1,FBGA-153,SMD,TRAY,KLM8G1GETF-B041,Samsung

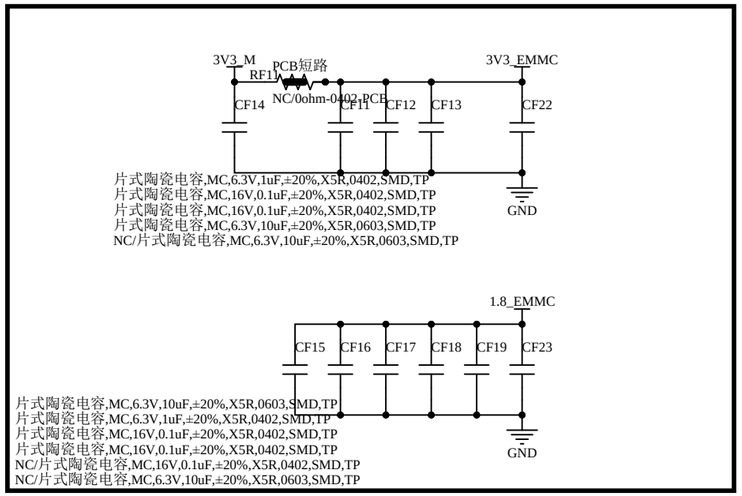
3V3_M
RF17
PCB短路
NC/0ohm-0402,PCB
3V3_EMMC
CF14
CF11
CF12
CF13
CF22
GND
片式陶瓷电容,MC,6.3V,1uF,±20%,X5R,0402,SMD,TP
片式陶瓷电容,MC,16V,0.1uF,±20%,X5R,0402,SMD,TP
片式陶瓷电容,MC,16V,0.1uF,±20%,X5R,0402,SMD,TP
片式陶瓷电容,MC,6.3V,10uF,±20%,X5R,0603,SMD,TP
NC/片式陶瓷电容,MC,6.3V,10uF,±20%,X5R,0603,SMD,TP
1.8_EMMC
CF15
CF16
CF17
CF18
CF19
CF23
GND
片式陶瓷电容,MC,6.3V,10uF,±20%,X5R,0603,SMD,TP
片式陶瓷电容,MC,6.3V,1uF,±20%,X5R,0402,SMD,TP
片式陶瓷电容,MC,16V,0.1uF,±20%,X5R,0402,SMD,TP
片式陶瓷电容,MC,16V,0.1uF,±20%,X5R,0402,SMD,TP
NC/片式陶瓷电容,MC,16V,0.1uF,±20%,X5R,0402,SMD,TP
NC/片式陶瓷电容,MC,6.3V,10uF,±20%,X5R,0603,SMD,TP

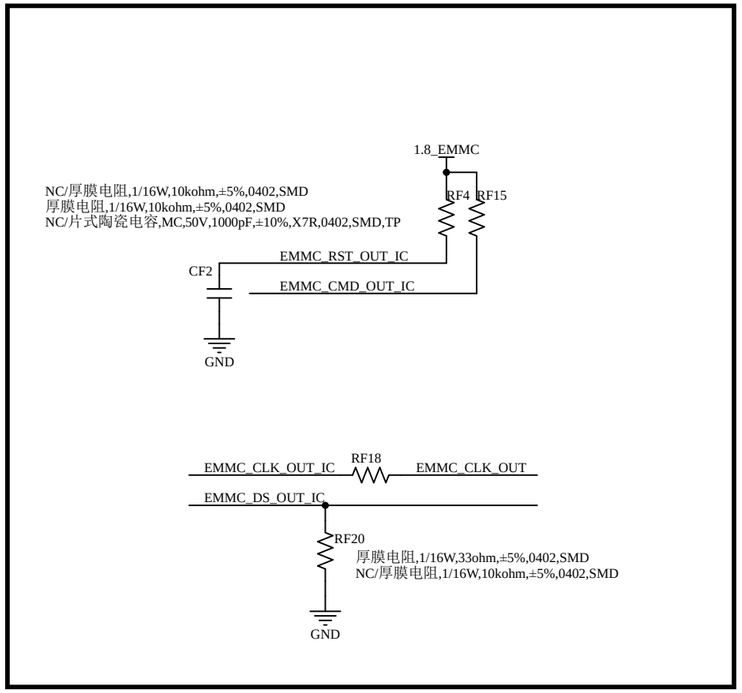
1.8_EMMC
NC/厚膜电阻,1/16W,10kohm,±5%,0402,SMD
厚膜电阻,1/16W,10kohm,±5%,0402,SMD
NC/片式陶瓷电容,MC,50V,1000pF,±10%,X7R,0402,SMD,TP
RF4
RF15
EMMC_RST_OUT_IC
CF2
EMMC_CMD_OUT_IC
GND
EMMC_CLK_OUT_IC
RF18
EMMC_CLK_OUT
EMMC_DS_OUT_IC
RF20
厚膜电阻,1/16W,33ohm,±5%,0402,SMD
NC/厚膜电阻,1/16W,10kohm,±5%,0402,SMD
GND

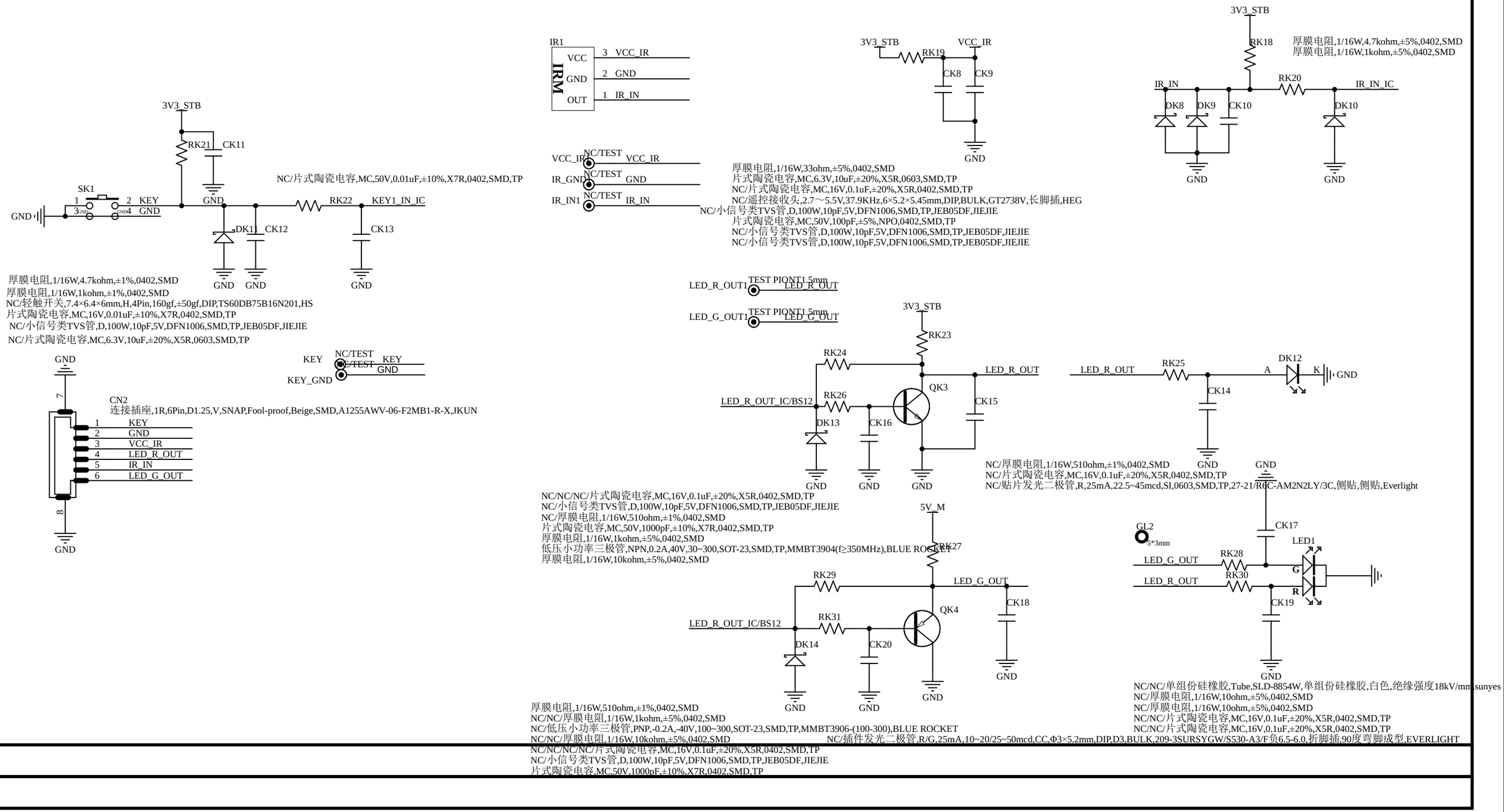
3V3_STB
RK21
CK11
SK1
1
2 KEY
3 GND
4 GND
GND
NC/片式陶瓷电容,MC,50V,0.01uF,±10%,X7R,0402,SMD,TP
RK22
KEY1_IN_IC
DK11
CK12
CK13
厚膜电阻,1/16W,4.7kohm,±1%,0402,SMD
厚膜电阻,1/16W,1kohm,±1%,0402,SMD
NC/轻触开关,7.4×6.4×6mm,H,4Pin,160gf,±50gf,DIP,TS60DB75B16N201,HS
片式陶瓷电容,MC,16V,0.01uF,±10%,X7R,0402,SMD,TP
NC/小信号类TVS管,D,100W,10pF,5V,DFN1006,SMD,TP,JEB05DF,JIEJIE
NC/片式陶瓷电容,MC,6.3V,10uF,±20%,X5R,0603,SMD,TP
IR1
IRM
VCC
GND
OUT
3 VCC_IR
2 GND
1 IR_IN
VCC_IR NC/TEST VCC_IR
IR_GND NC/TEST GND
IR_IN1 NC/TEST IR_IN
3V3_STB
RK19
VCC_IR
CK8
CK9
GND
厚膜电阻,1/16W,33ohm,±5%,0402,SMD
片式陶瓷电容,MC,6.3V,10uF,±20%,X5R,0603,SMD,TP
NC/片式陶瓷电容,MC,16V,0.1uF,±20%,X5R,0402,SMD,TP
NC/遥控接收头,2.7～5.5V,37.9KHz,6×5.2×5.45mm,DIP,BULK,GT2738V,长脚插,HEG
NC/小信号类TVS管,D,100W,10pF,5V,DFN1006,SMD,TP,JEB05DF,JIEJIE
片式陶瓷电容,MC,50V,100pF,±5%,NPO,0402,SMD,TP
NC/小信号类TVS管,D,100W,10pF,5V,DFN1006,SMD,TP,JEB05DF,JIEJIE
NC/小信号类TVS管,D,100W,10pF,5V,DFN1006,SMD,TP,JEB05DF,JIEJIE
3V3_STB
RK18
厚膜电阻,1/16W,4.7kohm,±5%,0402,SMD
厚膜电阻,1/16W,1kohm,±5%,0402,SMD
IR_IN
RK20
IR_IN_IC
DK8
DK9
CK10
DK10
GND
LED_R_OUT1 TEST PIONT1.5mm LED_R_OUT
LED_G_OUT1 TEST PIONT1.5mm LED_G_OUT
3V3_STB
RK23
RK24
LED_R_OUT
QK3
LED_R_OUT_IC/BS12
RK26
CK15
DK13
CK16
LED_R_OUT
RK25
DK12
A
K
GND
CK14
NC/厚膜电阻,1/16W,510ohm,±1%,0402,SMD
NC/片式陶瓷电容,MC,16V,0.1uF,±20%,X5R,0402,SMD,TP
NC/贴片发光二极管,R,25mA,22.5~45mcd,SI,0603,SMD,TP,27-21/R6C-AM2N2LY/3C,侧贴,侧贴,Everlight
GND
KEY NC/TEST KEY
NC/TEST GND
KEY_GND
GND
CN2
连接插座,1R,6Pin,D1.25,V,SNAP,Fool-proof,Beige,SMD,A1255AWV-06-F2MB1-R-X,JKUN
1 KEY
2 GND
3 VCC_IR
4 LED_R_OUT
5 IR_IN
6 LED_G_OUT
7
8
GND
NC/NC/NC/片式陶瓷电容,MC,16V,0.1uF,±20%,X5R,0402,SMD,TP
NC/小信号类TVS管,D,100W,10pF,5V,DFN1006,SMD,TP,JEB05DF,JIEJIE
NC/厚膜电阻,1/16W,510ohm,±1%,0402,SMD
片式陶瓷电容,MC,50V,1000pF,±10%,X7R,0402,SMD,TP
厚膜电阻,1/16W,1kohm,±5%,0402,SMD
低压小功率三极管,NPN,0.2A,40V,30~300,SOT-23,SMD,TP,MMBT3904(f≥350MHz),BLUE ROCKET
厚膜电阻,1/16W,10kohm,±5%,0402,SMD
5V_M
RK27
RK29
LED_G_OUT
QK4
CK18
LED_R_OUT_IC/BS12
RK31
DK14
CK20
GL2
5*3mm
CK17
LED1
LED_G_OUT
RK28
G
LED_R_OUT
RK30
R
CK19
NC/NC/单组份硅橡胶,Tube,SLD-8854W,单组份硅橡胶,白色,绝缘强度18kV/mm,sunyes
NC/厚膜电阻,1/16W,10ohm,±5%,0402,SMD
NC/厚膜电阻,1/16W,10ohm,±5%,0402,SMD
NC/NC/片式陶瓷电容,MC,16V,0.1uF,±20%,X5R,0402,SMD,TP
NC/NC/片式陶瓷电容,MC,16V,0.1uF,±20%,X5R,0402,SMD,TP
厚膜电阻,1/16W,510ohm,±1%,0402,SMD
NC/NC/厚膜电阻,1/16W,1kohm,±5%,0402,SMD
NC/低压小功率三极管,PNP,-0.2A,-40V,100~300,SOT-23,SMD,TP,MMBT3906-(100-300),BLUE ROCKET
NC/NC/厚膜电阻,1/16W,10kohm,±5%,0402,SMD
NC/插件发光二极管,R/G,25mA,10~20/25~50mcd,CC,Φ3×5.2mm,DIP,D3,BULK,209-3SURSYGW/S530-A3/F负6.5-6.0,折脚插,90度弯脚成型,EVERLIGHT
NC/NC/NC/片式陶瓷电容,MC,16V,0.1uF,±20%,X5R,0402,SMD,TP
NC/小信号类TVS管,D,100W,10pF,5V,DFN1006,SMD,TP,JEB05DF,JIEJIE
片式陶瓷电容,MC,50V,1000pF,±10%,X7R,0402,SMD,TP

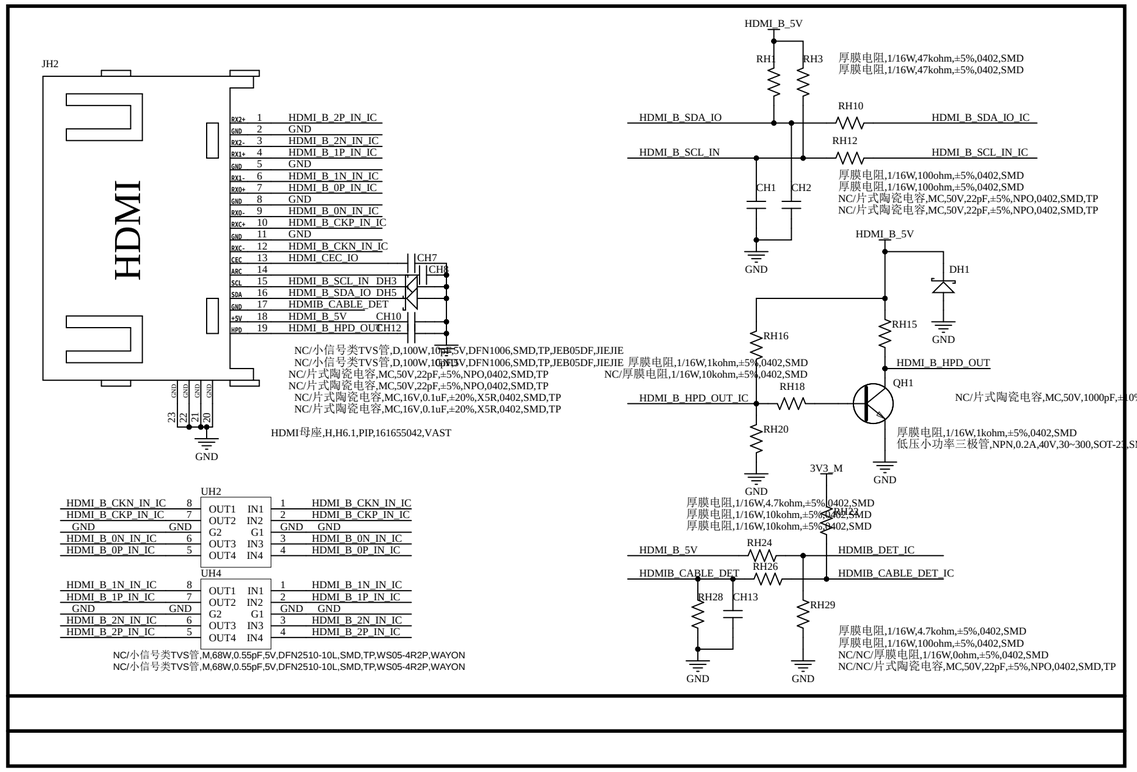
JH2
HDMI
HDMI_B_2P_IN_IC
HDMI_B_2N_IN_IC
HDMI_B_1P_IN_IC
HDMI_B_1N_IN_IC
HDMI_B_0P_IN_IC
HDMI_B_0N_IN_IC
HDMI_B_CKP_IN_IC
HDMI_B_CKN_IN_IC
HDMI_CEC_IO
HDMI_B_SCL_IN_DH3
HDMI_B_SDA_IO_DH5
HDMIB_CABLE_DET
HDMI_B_5V
HDMI_B_HPD_OUT
HDMI_B_5V
RH1
RH3
厚膜电阻,1/16W,47kohm,±5%,0402,SMD
厚膜电阻,1/16W,47kohm,±5%,0402,SMD
HDMI_B_SDA_IO
RH10
HDMI_B_SDA_IO_IC
HDMI_B_SCL_IN
RH12
HDMI_B_SCL_IN_IC
厚膜电阻,1/16W,100ohm,±5%,0402,SMD
厚膜电阻,1/16W,100ohm,±5%,0402,SMD
NC/片式陶瓷电容,MC,50V,22pF,±5%,NPO,0402,SMD,TP
NC/片式陶瓷电容,MC,50V,22pF,±5%,NPO,0402,SMD,TP
CH1
CH2
GND
HDMI_B_5V
DH1
RH16
RH15
GND
HDMI_B_HPD_OUT
QH1
HDMI_B_HPD_OUT_IC
RH18
RH20
厚膜电阻,1/16W,1kohm,±5%,0402,SMD
NC/厚膜电阻,1/16W,10kohm,±5%,0402,SMD
NC/片式陶瓷电容,MC,50V,1000pF,±10%,X7R,0402,SMD,TP
厚膜电阻,1/16W,1kohm,±5%,0402,SMD
低压小功率三极管,NPN,0.2A,40V,30~300,SOT-23,SMD,TP,MMBT3904(f≥350MHz),BLUE ROCKET
3V3_M
厚膜电阻,1/16W,4.7kohm,±5%,0402,SMD
厚膜电阻,1/16W,10kohm,±5%,0402,SMD
厚膜电阻,1/16W,10kohm,±5%,0402,SMD
RH24
HDMIB_DET_IC
HDMIB_CABLE_DET
RH26
HDMIB_CABLE_DET_IC
RH28
CH13
RH29
厚膜电阻,1/16W,4.7kohm,±5%,0402,SMD
厚膜电阻,1/16W,100ohm,±5%,0402,SMD
NC/NC/厚膜电阻,1/16W,0ohm,±5%,0402,SMD
NC/NC/片式陶瓷电容,MC,50V,22pF,±5%,NPO,0402,SMD,TP
NC/小信号类TVS管,D,100W,10pF,5V,DFN1006,SMD,TP,JEB05DF,JIEJIE
NC/小信号类TVS管,D,100W,10pF,5V,DFN1006,SMD,TP,JEB05DF,JIEJIE
NC/片式陶瓷电容,MC,50V,22pF,±5%,NPO,0402,SMD,TP
NC/片式陶瓷电容,MC,50V,22pF,±5%,NPO,0402,SMD,TP
NC/片式陶瓷电容,MC,16V,0.1uF,±20%,X5R,0402,SMD,TP
NC/片式陶瓷电容,MC,16V,0.1uF,±20%,X5R,0402,SMD,TP
HDMI母座,H,H6.1,PIP,161655042,VAST
UH2
HDMI_B_CKN_IN_IC
HDMI_B_CKP_IN_IC
GND
HDMI_B_0N_IN_IC
HDMI_B_0P_IN_IC
OUT1 IN1
OUT2 IN2
G2 G1
OUT3 IN3
OUT4 IN4
HDMI_B_CKN_IN_IC
HDMI_B_CKP_IN_IC
GND
HDMI_B_0N_IN_IC
HDMI_B_0P_IN_IC
UH4
HDMI_B_1N_IN_IC
HDMI_B_1P_IN_IC
GND
HDMI_B_2N_IN_IC
HDMI_B_2P_IN_IC
HDMI_B_1N_IN_IC
HDMI_B_1P_IN_IC
GND
HDMI_B_2N_IN_IC
HDMI_B_2P_IN_IC
NC/小信号类TVS管,M,68W,0.55pF,5V,DFN2510-10L,SMD,TP,WS05-4R2P,WAYON
NC/小信号类TVS管,M,68W,0.55pF,5V,DFN2510-10L,SMD,TP,WS05-4R2P,WAYON

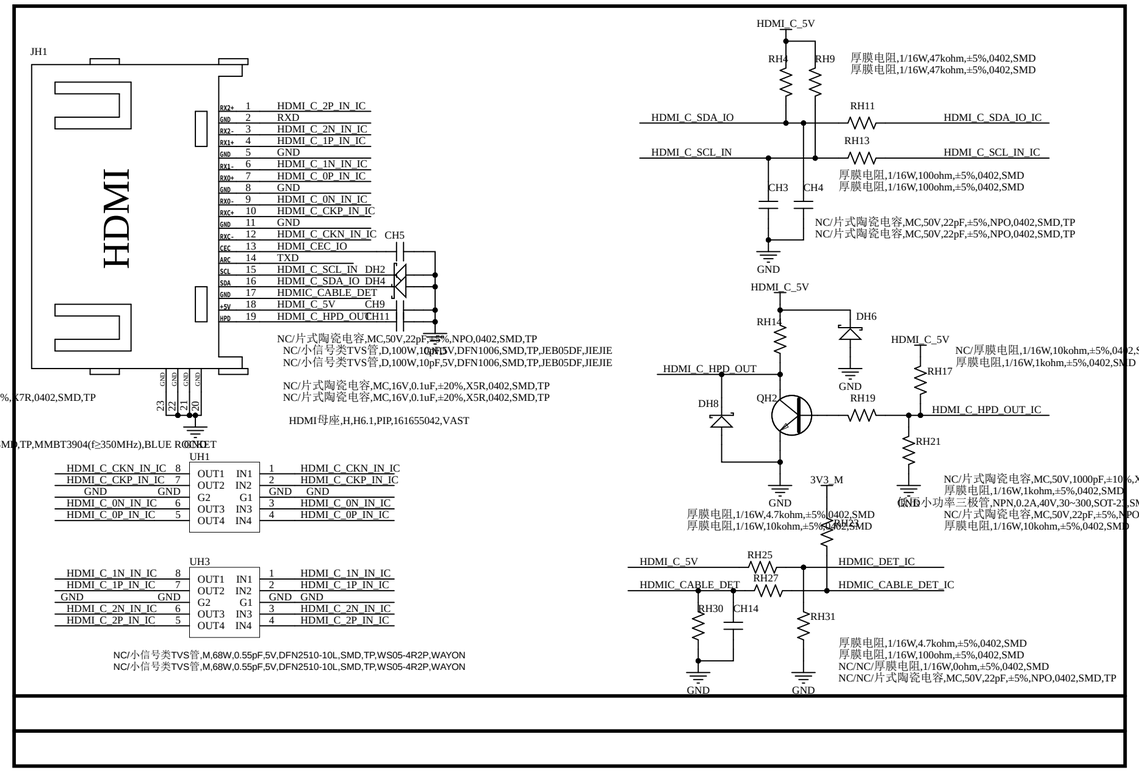
JH1
HDMI
HDMI_C_2P_IN_IC
RXD
HDMI_C_2N_IN_IC
HDMI_C_1P_IN_IC
GND
HDMI_C_1N_IN_IC
HDMI_C_0P_IN_IC
GND
HDMI_C_0N_IN_IC
HDMI_C_CKP_IN_IC
HDMI_C_CKN_IN_IC
GND
HDMI_CEC_IO
TXD
HDMI_C_SCL_IN_DH2
HDMI_C_SDA_IO_DH4
HDMIC_CABLE_DET
HDMI_C_5V
HDMI_C_HPD_OUT
HDMI_C_5V
RH4
RH9
厚膜电阻,1/16W,47kohm,±5%,0402,SMD
厚膜电阻,1/16W,47kohm,±5%,0402,SMD
HDMI_C_SDA_IO
RH11
HDMI_C_SDA_IO_IC
HDMI_C_SCL_IN
RH13
HDMI_C_SCL_IN_IC
厚膜电阻,1/16W,100ohm,±5%,0402,SMD
厚膜电阻,1/16W,100ohm,±5%,0402,SMD
CH3
CH4
NC/片式陶瓷电容,MC,50V,22pF,±5%,NPO,0402,SMD,TP
NC/片式陶瓷电容,MC,50V,22pF,±5%,NPO,0402,SMD,TP
GND
CH5
HDMI_C_5V
DH6
RH14
HDMI_C_5V
NC/厚膜电阻,1/16W,10kohm,±5%,0402,SMD
厚膜电阻,1/16W,1kohm,±5%,0402,SMD
HDMI_C_HPD_OUT
RH17
DH8
QH2
RH19
HDMI_C_HPD_OUT_IC
RH21
3V3_M
NC/片式陶瓷电容,MC,50V,1000pF,±10%,X7R,0402,SMD,TP
厚膜电阻,1/16W,1kohm,±5%,0402,SMD
低压小功率三极管,NPN,0.2A,40V,30~300,SOT-23,SMD,TP,MMBT3904(f≥350MHz),BLUE ROCKET
NC/片式陶瓷电容,MC,50V,22pF,±5%,NPO,0402,SMD,TP
厚膜电阻,1/16W,10kohm,±5%,0402,SMD
厚膜电阻,1/16W,4.7kohm,±5%,0402,SMD
厚膜电阻,1/16W,10kohm,±5%,0402,SMD
RH25
HDMIC_DET_IC
HDMIC_CABLE_DET
RH27
HDMIC_CABLE_DET_IC
RH30
CH14
RH31
厚膜电阻,1/16W,4.7kohm,±5%,0402,SMD
厚膜电阻,1/16W,100ohm,±5%,0402,SMD
NC/NC/厚膜电阻,1/16W,0ohm,±5%,0402,SMD
NC/NC/片式陶瓷电容,MC,50V,22pF,±5%,NPO,0402,SMD,TP
UH1
HDMI_C_CKN_IN_IC
HDMI_C_CKP_IN_IC
GND
HDMI_C_0N_IN_IC
HDMI_C_0P_IN_IC
OUT1 IN1
OUT2 IN2
G2 G1
OUT3 IN3
OUT4 IN4
HDMI_C_CKN_IN_IC
HDMI_C_CKP_IN_IC
GND
HDMI_C_0N_IN_IC
HDMI_C_0P_IN_IC
UH3
HDMI_C_1N_IN_IC
HDMI_C_1P_IN_IC
GND
HDMI_C_2N_IN_IC
HDMI_C_2P_IN_IC
HDMI_C_1N_IN_IC
HDMI_C_1P_IN_IC
GND
HDMI_C_2N_IN_IC
HDMI_C_2P_IN_IC
NC/小信号类TVS管,M,68W,0.55pF,5V,DFN2510-10L,SMD,TP,WS05-4R2P,WAYON
NC/小信号类TVS管,M,68W,0.55pF,5V,DFN2510-10L,SMD,TP,WS05-4R2P,WAYON

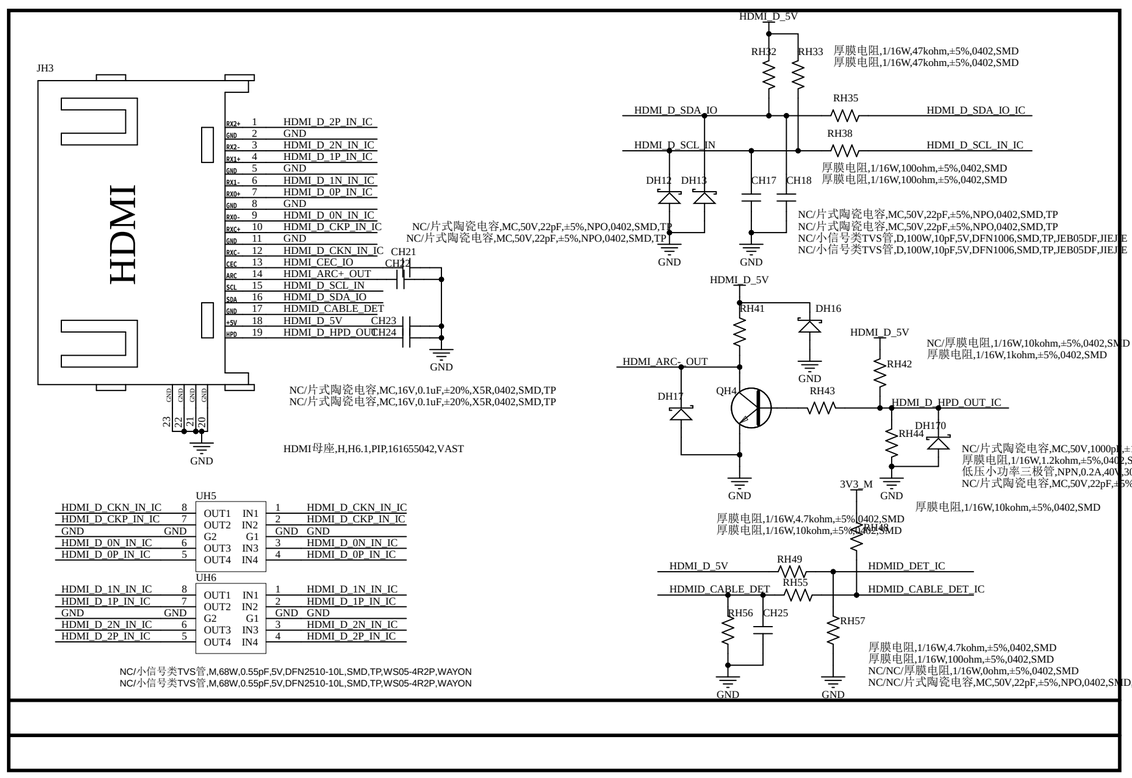
JH3
HDMI
HDMI_D_2P_IN_IC
GND
HDMI_D_2N_IN_IC
HDMI_D_1P_IN_IC
GND
HDMI_D_1N_IN_IC
HDMI_D_0P_IN_IC
GND
HDMI_D_0N_IN_IC
HDMI_D_CKP_IN_IC
HDMI_D_CKN_IN_IC
GND
HDMI_CEC_IO
HDMI_ARC+_OUT
HDMI_D_SCL_IN
HDMI_D_SDA_IO
HDMID_CABLE_DET
HDMI_D_5V
HDMI_D_HPD_OUT
HDMI_D_5V
RH32
RH33
厚膜电阻,1/16W,47kohm,±5%,0402,SMD
厚膜电阻,1/16W,47kohm,±5%,0402,SMD
HDMI_D_SDA_IO
RH35
HDMI_D_SDA_IO_IC
HDMI_D_SCL_IN
RH38
HDMI_D_SCL_IN_IC
厚膜电阻,1/16W,100ohm,±5%,0402,SMD
厚膜电阻,1/16W,100ohm,±5%,0402,SMD
DH12
DH13
CH17
CH18
NC/片式陶瓷电容,MC,50V,22pF,±5%,NPO,0402,SMD,TP
NC/片式陶瓷电容,MC,50V,22pF,±5%,NPO,0402,SMD,TP
NC/小信号类TVS管,D,100W,10pF,5V,DFN1006,SMD,TP,JEB05DF,JIEJIE
NC/小信号类TVS管,D,100W,10pF,5V,DFN1006,SMD,TP,JEB05DF,JIEJIE
NC/片式陶瓷电容,MC,50V,22pF,±5%,NPO,0402,SMD,TP
NC/片式陶瓷电容,MC,50V,22pF,±5%,NPO,0402,SMD,TP
CH21
GND
HDMI_D_5V
RH41
DH16
HDMI_D_5V
NC/厚膜电阻,1/16W,10kohm,±5%,0402,SMD
厚膜电阻,1/16W,1kohm,±5%,0402,SMD
HDMI_ARC-_OUT
RH42
DH17
QH4
RH43
HDMI_D_HPD_OUT_IC
DH170
RH44
NC/片式陶瓷电容,MC,50V,1000pF,±10%,X7R,0402,SMD,TP
厚膜电阻,1/16W,1.2kohm,±5%,0402,SMD
低压小功率三极管,NPN,0.2A,40V,30~300,SOT-23,SMD,TP,MMBT3904(f≥350MHz),BLUE ROCKET
NC/片式陶瓷电容,MC,50V,22pF,±5%,NPO,0402,SMD,TP
3V3_M
厚膜电阻,1/16W,10kohm,±5%,0402,SMD
厚膜电阻,1/16W,4.7kohm,±5%,0402,SMD
厚膜电阻,1/16W,10kohm,±5%,0402,SMD
RH49
HDMID_DET_IC
HDMID_CABLE_DET
RH55
HDMID_CABLE_DET_IC
RH56
CH25
RH57
厚膜电阻,1/16W,4.7kohm,±5%,0402,SMD
厚膜电阻,1/16W,100ohm,±5%,0402,SMD
NC/NC/厚膜电阻,1/16W,0ohm,±5%,0402,SMD
NC/NC/片式陶瓷电容,MC,50V,22pF,±5%,NPO,0402,SMD,TP
NC/片式陶瓷电容,MC,16V,0.1uF,±20%,X5R,0402,SMD,TP
NC/片式陶瓷电容,MC,16V,0.1uF,±20%,X5R,0402,SMD,TP
HDMI母座,H,H6.1,PIP,161655042,VAST
UH5
HDMI_D_CKN_IN_IC
HDMI_D_CKP_IN_IC
GND
HDMI_D_0N_IN_IC
HDMI_D_0P_IN_IC
OUT1 IN1
OUT2 IN2
G2 G1
OUT3 IN3
OUT4 IN4
HDMI_D_CKN_IN_IC
HDMI_D_CKP_IN_IC
GND
HDMI_D_0N_IN_IC
HDMI_D_0P_IN_IC
UH6
HDMI_D_1N_IN_IC
HDMI_D_1P_IN_IC
GND
HDMI_D_2N_IN_IC
HDMI_D_2P_IN_IC
HDMI_D_1N_IN_IC
HDMI_D_1P_IN_IC
GND
HDMI_D_2N_IN_IC
HDMI_D_2P_IN_IC
NC/小信号类TVS管,M,68W,0.55pF,5V,DFN2510-10L,SMD,TP,WS05-4R2P,WAYON
NC/小信号类TVS管,M,68W,0.55pF,5V,DFN2510-10L,SMD,TP,WS05-4R2P,WAYON

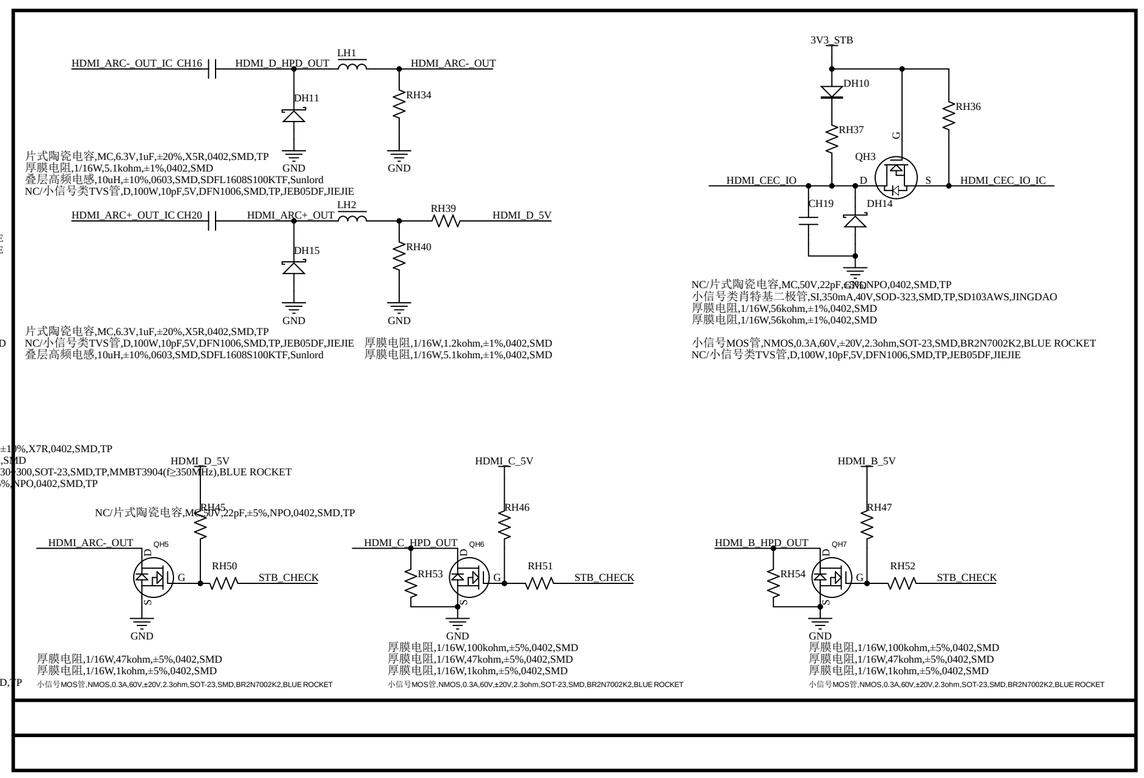
HDMI_ARC-_OUT_IC CH16
HDMI_D_HPD_OUT
LH1
HDMI_ARC-_OUT
DH11
RH34
片式陶瓷电容,MC,6.3V,1uF,±20%,X5R,0402,SMD,TP
厚膜电阻,1/16W,5.1kohm,±1%,0402,SMD
叠层高频电感,10uH,±10%,0603,SMD,SDFL1608S100KTF,Sunlord
NC/小信号类TVS管,D,100W,10pF,5V,DFN1006,SMD,TP,JEB05DF,JIEJIE
HDMI_ARC+_OUT_IC CH20
HDMI_ARC+_OUT
LH2
RH39
HDMI_D_5V
DH15
RH40
片式陶瓷电容,MC,6.3V,1uF,±20%,X5R,0402,SMD,TP
NC/小信号类TVS管,D,100W,10pF,5V,DFN1006,SMD,TP,JEB05DF,JIEJIE
叠层高频电感,10uH,±10%,0603,SMD,SDFL1608S100KTF,Sunlord
厚膜电阻,1/16W,1.2kohm,±1%,0402,SMD
厚膜电阻,1/16W,5.1kohm,±1%,0402,SMD
3V3_STB
DH10
RH36
RH37
QH3
HDMI_CEC_IO
HDMI_CEC_IO_IC
CH19
DH14
NC/片式陶瓷电容,MC,50V,22pF,±5%,NPO,0402,SMD,TP
小信号类肖特基二极管,SI,350mA,40V,SOD-323,SMD,TP,SD103AWS,JINGDAO
厚膜电阻,1/16W,56kohm,±1%,0402,SMD
厚膜电阻,1/16W,56kohm,±1%,0402,SMD
小信号MOS管,NMOS,0.3A,60V,±20V,2.3ohm,SOT-23,SMD,BR2N7002K2,BLUE ROCKET
NC/小信号类TVS管,D,100W,10pF,5V,DFN1006,SMD,TP,JEB05DF,JIEJIE
HDMI_D_5V
NC/片式陶瓷电容,MC,50V,22pF,±5%,NPO,0402,SMD,TP
RH45
HDMI_ARC-_OUT
QH5
RH50
STB_CHECK
厚膜电阻,1/16W,47kohm,±5%,0402,SMD
厚膜电阻,1/16W,1kohm,±5%,0402,SMD
小信号MOS管,NMOS,0.3A,60V,±20V,2.3ohm,SOT-23,SMD,BR2N7002K2,BLUE ROCKET
HDMI_C_5V
RH46
HDMI_C_HPD_OUT
QH6
RH53
RH51
STB_CHECK
厚膜电阻,1/16W,100kohm,±5%,0402,SMD
厚膜电阻,1/16W,47kohm,±5%,0402,SMD
厚膜电阻,1/16W,1kohm,±5%,0402,SMD
小信号MOS管,NMOS,0.3A,60V,±20V,2.3ohm,SOT-23,SMD,BR2N7002K2,BLUE ROCKET
HDMI_B_5V
RH47
HDMI_B_HPD_OUT
QH7
RH54
RH52
STB_CHECK
厚膜电阻,1/16W,100kohm,±5%,0402,SMD
厚膜电阻,1/16W,47kohm,±5%,0402,SMD
厚膜电阻,1/16W,1kohm,±5%,0402,SMD
小信号MOS管,NMOS,0.3A,60V,±20V,2.3ohm,SOT-23,SMD,BR2N7002K2,BLUE ROCKET

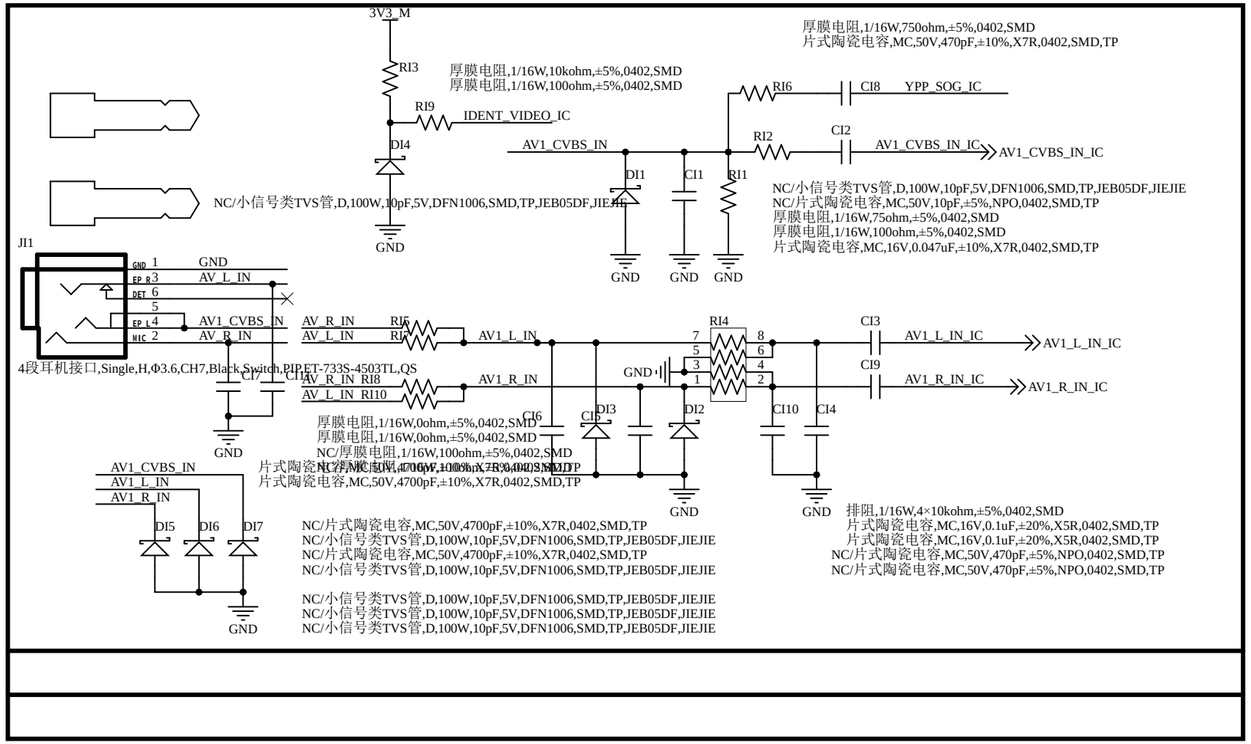
3V3_M
RI3
厚膜电阻,1/16W,10kohm,±5%,0402,SMD
厚膜电阻,1/16W,100ohm,±5%,0402,SMD
RI9
IDENT_VIDEO_IC
DI4
GND
NC/小信号类TVS管,D,100W,10pF,5V,DFN1006,SMD,TP,JEB05DF,JIEJIE
厚膜电阻,1/16W,750ohm,±5%,0402,SMD
片式陶瓷电容,MC,50V,470pF,±10%,X7R,0402,SMD,TP
RI6
CI8
YPP_SOG_IC
AV1_CVBS_IN
RI2
CI2
AV1_CVBS_IN_IC
AV1_CVBS_IN_IC
DI1
CI1
RI1
NC/小信号类TVS管,D,100W,10pF,5V,DFN1006,SMD,TP,JEB05DF,JIEJIE
NC/片式陶瓷电容,MC,50V,10pF,±5%,NPO,0402,SMD,TP
厚膜电阻,1/16W,75ohm,±5%,0402,SMD
厚膜电阻,1/16W,100ohm,±5%,0402,SMD
片式陶瓷电容,MC,16V,0.047uF,±10%,X7R,0402,SMD,TP
GND
GND
GND
JI1
GND 1 GND
EP R 3 AV_L_IN
DET 6
5
EP L 4 AV1_CVBS_IN
MIC 2 AV_R_IN
4段耳机接口,Single,H,Φ3.6,CH7,Black,Switch,PIP,ET-733S-4503TL,QS
CI7
CI5
GND
AV_R_IN RI5
AV_L_IN RI7
AV1_L_IN
AV_R_IN RI8
AV_L_IN RI10
AV1_R_IN
RI4
GND
CI3
AV1_L_IN_IC
AV1_L_IN_IC
CI9
AV1_R_IN_IC
AV1_R_IN_IC
CI6
CI2
DI3
DI2
CI10
CI4
GND
GND
厚膜电阻,1/16W,0ohm,±5%,0402,SMD
厚膜电阻,1/16W,0ohm,±5%,0402,SMD
NC/厚膜电阻,1/16W,100ohm,±5%,0402,SMD
NC/片式陶瓷电容,MC,50V,470pF,±10%,X7R,0402,SMD,TP
片式陶瓷电容,MC,50V,470pF,±10%,X7R,0402,SMD,TP
AV1_CVBS_IN
AV1_L_IN
AV1_R_IN
DI5
DI6
DI7
GND
NC/片式陶瓷电容,MC,50V,470pF,±10%,X7R,0402,SMD,TP
NC/小信号类TVS管,D,100W,10pF,5V,DFN1006,SMD,TP,JEB05DF,JIEJIE
NC/片式陶瓷电容,MC,50V,470pF,±10%,X7R,0402,SMD,TP
NC/小信号类TVS管,D,100W,10pF,5V,DFN1006,SMD,TP,JEB05DF,JIEJIE
NC/小信号类TVS管,D,100W,10pF,5V,DFN1006,SMD,TP,JEB05DF,JIEJIE
NC/小信号类TVS管,D,100W,10pF,5V,DFN1006,SMD,TP,JEB05DF,JIEJIE
NC/小信号类TVS管,D,100W,10pF,5V,DFN1006,SMD,TP,JEB05DF,JIEJIE
排阻,1/16W,4×10kohm,±5%,0402,SMD
片式陶瓷电容,MC,16V,0.1uF,±20%,X5R,0402,SMD,TP
片式陶瓷电容,MC,16V,0.1uF,±20%,X5R,0402,SMD,TP
NC/片式陶瓷电容,MC,50V,470pF,±5%,NPO,0402,SMD,TP
NC/片式陶瓷电容,MC,50V,470pF,±5%,NPO,0402,SMD,TP

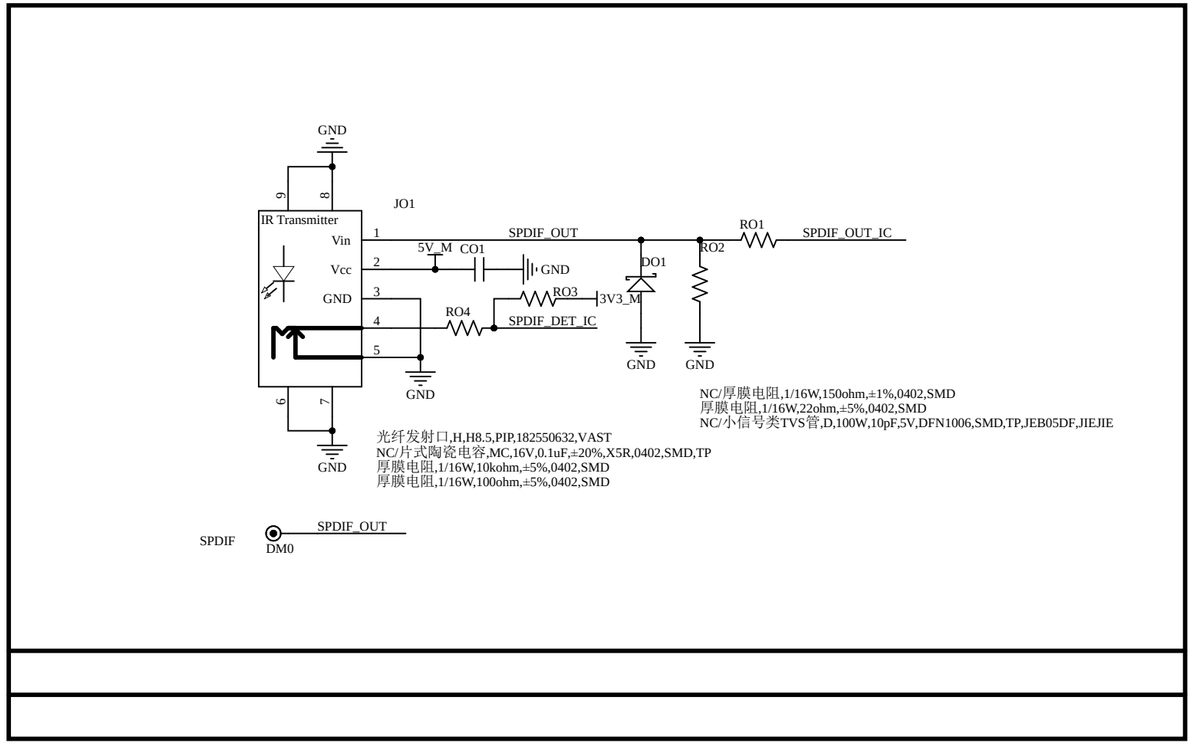
GND
JO1
IR Transmitter
Vin
Vcc
GND
SPDIF_OUT
5V_M
CO1
GND
RO1
SPDIF_OUT_IC
RO2
DO1
RO3
3V3_M
RO4
SPDIF_DET_IC
GND
GND
GND
GND
NC/厚膜电阻,1/16W,150ohm,±1%,0402,SMD
厚膜电阻,1/16W,22ohm,±5%,0402,SMD
NC/小信号类TVS管,D,100W,10pF,5V,DFN1006,SMD,TP,JEB05DF,JIEJIE
光纤发射口,H,H8.5,PIP,182550632,VAST
NC/片式陶瓷电容,MC,16V,0.1uF,±20%,X5R,0402,SMD,TP
厚膜电阻,1/16W,10kohm,±5%,0402,SMD
厚膜电阻,1/16W,100ohm,±5%,0402,SMD
SPDIF
SPDIF_OUT
DM0

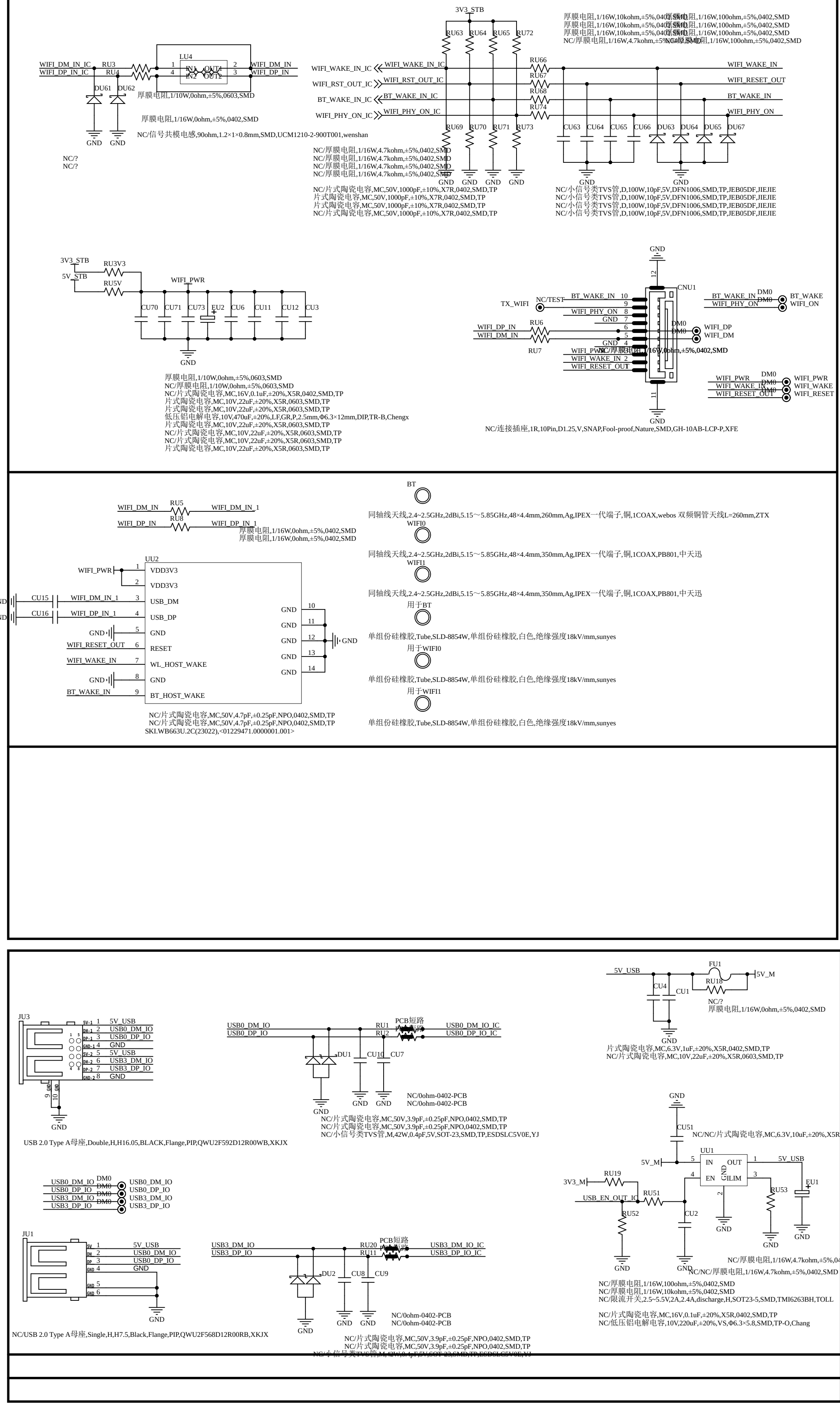
WIFI_DM_IN_IC
WIFI_DP_IN_IC
RU3
RU4
LU4
IN1 OUT1
IN2 OUT2
WIFI_DM_IN
WIFI_DP_IN
DU61 DU62
厚膜电阻,1/10W,0ohm,±5%,0603,SMD
厚膜电阻,1/16W,0ohm,±5%,0402,SMD
NC/信号共模电感,90ohm,1.2×1×0.8mm,SMD,UCM1210-2-900T001,wenshan
GND GND
NC/?
NC/?
3V3_STB
RU63 RU64 RU65 RU72
WIFI_WAKE_IN_IC
WIFI_RST_OUT_IC
BT_WAKE_IN_IC
WIFI_PHY_ON_IC
RU66
RU67
RU68
RU74
WIFI_WAKE_IN
WIFI_RESET_OUT
BT_WAKE_IN
WIFI_PHY_ON
RU69 RU70 RU71 RU73
CU63 CU64 CU65 CU66 DU63 DU64 DU65 DU67
厚膜电阻,1/16W,10kohm,±5%,0402,SMD
厚膜电阻,1/16W,100ohm,±5%,0402,SMD
NC/厚膜电阻,1/16W,4.7kohm,±5%,0402,SMD
NC/厚膜电阻,1/16W,4.7kohm,±5%,0402,SMD
NC/厚膜电阻,1/16W,4.7kohm,±5%,0402,SMD
NC/厚膜电阻,1/16W,4.7kohm,±5%,0402,SMD
NC/片式陶瓷电容,MC,50V,1000pF,±10%,X7R,0402,SMD,TP
片式陶瓷电容,MC,50V,1000pF,±10%,X7R,0402,SMD,TP
片式陶瓷电容,MC,50V,1000pF,±10%,X7R,0402,SMD,TP
NC/片式陶瓷电容,MC,50V,1000pF,±10%,X7R,0402,SMD,TP
NC/小信号类TVS管,D,100W,10pF,5V,DFN1006,SMD,TP,JEB05DF,JIEJIE
NC/小信号类TVS管,D,100W,10pF,5V,DFN1006,SMD,TP,JEB05DF,JIEJIE
NC/小信号类TVS管,D,100W,10pF,5V,DFN1006,SMD,TP,JEB05DF,JIEJIE
NC/小信号类TVS管,D,100W,10pF,5V,DFN1006,SMD,TP,JEB05DF,JIEJIE
3V3_STB
5V_STB
RU3V3
RU5V
WIFI_PWR
CU70 CU71 CU73 EU2 CU6 CU11 CU12 CU3
厚膜电阻,1/10W,0ohm,±5%,0603,SMD
NC/厚膜电阻,1/10W,0ohm,±5%,0603,SMD
NC/片式陶瓷电容,MC,16V,0.1uF,±20%,X5R,0402,SMD,TP
片式陶瓷电容,MC,10V,22uF,±20%,X5R,0603,SMD,TP
片式陶瓷电容,MC,10V,22uF,±20%,X5R,0603,SMD,TP
低压铝电解电容,10V,470uF,±20%,LF,GR,P,2.5mm,Φ6.3×12mm,DIP,TR-B,Chengx
片式陶瓷电容,MC,10V,22uF,±20%,X5R,0603,SMD,TP
NC/片式陶瓷电容,MC,10V,22uF,±20%,X5R,0603,SMD,TP
NC/片式陶瓷电容,MC,10V,22uF,±20%,X5R,0603,SMD,TP
片式陶瓷电容,MC,10V,22uF,±20%,X5R,0603,SMD,TP
CNU1
TX_WIFI
NC/TEST
BT_WAKE_IN
WIFI_PHY_ON
WIFI_DP_IN
WIFI_DM_IN
RU6
RU7
WIFI_PWR
WIFI_WAKE_IN
WIFI_RESET_OUT
BT_WAKE
WIFI_ON
WIFI_DP
WIFI_DM
NC/厚膜电阻,1/16W,0ohm,±5%,0402,SMD
WIFI_PWR
WIFI_WAKE
WIFI_RESET
NC/连接插座,1R,10Pin,D1.25,V,SNAP,Fool-proof,Nature,SMD,GH-10AB-LCP-P,XFE
WIFI_DM_IN
WIFI_DP_IN
RU5
RU8
WIFI_DM_IN_1
WIFI_DP_IN_1
厚膜电阻,1/16W,0ohm,±5%,0402,SMD
厚膜电阻,1/16W,0ohm,±5%,0402,SMD
UU2
WIFI_PWR
VDD3V3
VDD3V3
CU15 CU16
WIFI_DM_IN_1
WIFI_DP_IN_1
USB_DM
USB_DP
GND
WIFI_RESET_OUT
RESET
WIFI_WAKE_IN
WL_HOST_WAKE
BT_HOST_WAKE
NC/片式陶瓷电容,MC,50V,4.7pF,±0.25pF,NPO,0402,SMD,TP
NC/片式陶瓷电容,MC,50V,4.7pF,±0.25pF,NPO,0402,SMD,TP
SKI.WB663U.2C(23022),<01229471.0000001.001>
BT
同轴线天线,2.4~2.5GHz,2dBi,5.15～5.85GHz,48×4.4mm,260mm,Ag,IPEX一代端子,铜,1COAX,webos 双频铜管天线L=260mm,ZTX
WIFI0
同轴线天线,2.4~2.5GHz,2dBi,5.15～5.85GHz,48×4.4mm,350mm,Ag,IPEX一代端子,铜,1COAX,PB801,中天迅
WIFI1
同轴线天线,2.4~2.5GHz,2dBi,5.15～5.85GHz,48×4.4mm,350mm,Ag,IPEX一代端子,铜,1COAX,PB801,中天迅
用于BT
单组份硅橡胶,Tube,SLD-8854W,单组份硅橡胶,白色,绝缘强度18kV/mm,sunyes
用于WIFI0
单组份硅橡胶,Tube,SLD-8854W,单组份硅橡胶,白色,绝缘强度18kV/mm,sunyes
用于WIFI1
单组份硅橡胶,Tube,SLD-8854W,单组份硅橡胶,白色,绝缘强度18kV/mm,sunyes
5V_USB
FU1
5V_M
CU4
CU1
RU18
NC/?
厚膜电阻,1/16W,0ohm,±5%,0402,SMD
片式陶瓷电容,MC,6.3V,1uF,±20%,X5R,0402,SMD,TP
NC/片式陶瓷电容,MC,10V,22uF,±20%,X5R,0603,SMD,TP
JU3
5V_USB
USB0_DM_IO
USB0_DP_IO
GND
5V_USB
USB3_DM_IO
USB3_DP_IO
GND
USB 2.0 Type A母座,Double,H,H16.05,BLACK,Flange,PIP,QWU2F592D12R00WB,XKJX
USB0_DM_IO
USB0_DP_IO
RU1
RU2
PCB短路
USB0_DM_IO_IC
USB0_DP_IO_IC
DU1
CU10 CU7
NC/0ohm-0402-PCB
NC/0ohm-0402-PCB
NC/片式陶瓷电容,MC,50V,3.9pF,±0.25pF,NPO,0402,SMD,TP
NC/片式陶瓷电容,MC,50V,3.9pF,±0.25pF,NPO,0402,SMD,TP
NC/小信号类TVS管,M,42W,0.4pF,5V,SOT-23,SMD,TP,ESDSLC5V0E,YJ
CU51
NC/NC/片式陶瓷电容,MC,6.3V,10uF,±20%,X5R,0603,SMD,TP
UU1
5V_M
IN OUT
EN ILIM
5V_USB
3V3_M
RU19
RU51
USB_EN_OUT_IC
RU52
CU2
RU53
EU1
NC/厚膜电阻,1/16W,4.7kohm,±5%,0402,SMD
NC/NC/厚膜电阻,1/16W,4.7kohm,±5%,0402,SMD
NC/厚膜电阻,1/16W,100ohm,±5%,0402,SMD
NC/厚膜电阻,1/16W,10kohm,±5%,0402,SMD
NC/限流开关,2.5~5.5V,2A,2.4A,discharge,H,SOT23-5,SMD,TMI6263BH,TOLL
NC/片式陶瓷电容,MC,16V,0.1uF,±20%,X5R,0402,SMD,TP
NC/低压铝电解电容,10V,220uF,±20%,VS,Φ6.3×5.8,SMD,TP-O,Chang
USB0_DM_IO
USB0_DP_IO
USB3_DM_IO
USB3_DP_IO
JU1
5V_USB
USB0_DM_IO
USB0_DP_IO
GND
GND
NC/USB 2.0 Type A母座,Single,H,H7.5,Black,Flange,PIP,QWU2F568D12R00RB,XKJX
USB3_DM_IO
USB3_DP_IO
RU20
RU11
PCB短路
USB3_DM_IO_IC
USB3_DP_IO_IC
DU2
CU8 CU9
NC/0ohm-0402-PCB
NC/0ohm-0402-PCB
NC/片式陶瓷电容,MC,50V,3.9pF,±0.25pF,NPO,0402,SMD,TP
NC/片式陶瓷电容,MC,50V,3.9pF,±0.25pF,NPO,0402,SMD,TP
NC/小信号类TVS管,M,42W,0.4pF,5V,SOT-23,SMD,TP,ESDSLC5V0E,YJ

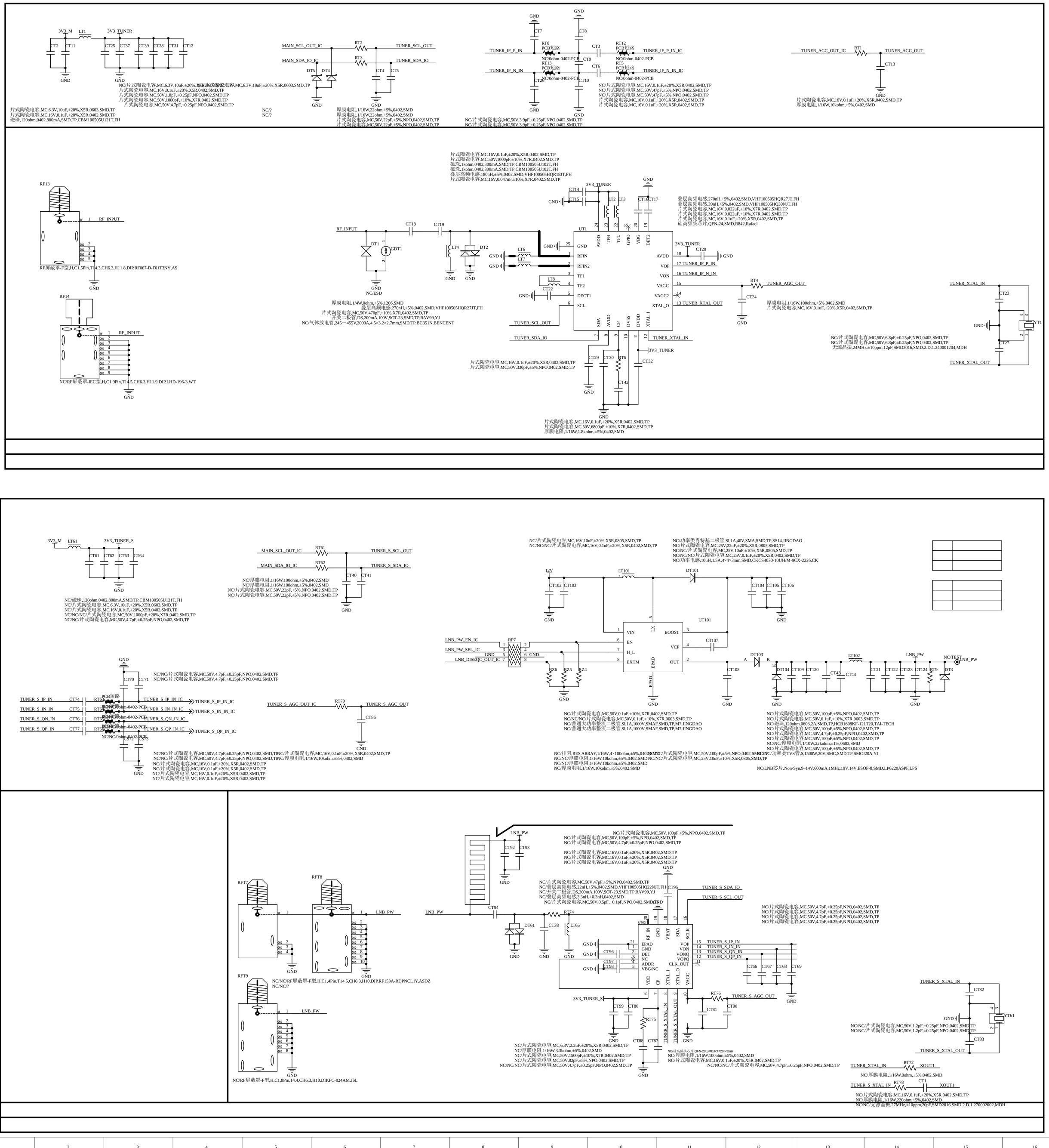
3V3_M
LT1
3V3_TUNER
CT2
CT11
CT25
CT37
CT39
CT28
CT31
CT12
GND
NC/片式陶瓷电容,MC,6.3V,10uF,±20%,X5R,0603,SMD,TP
片式陶瓷电容,MC,16V,0.1uF,±20%,X5R,0402,SMD,TP
片式陶瓷电容,MC,50V,1.8pF,±0.25pF,NPO,0402,SMD,TP
片式陶瓷电容,MC,50V,1000pF,±10%,X7R,0402,SMD,TP
片式陶瓷电容,MC,50V,4.7pF,±0.25pF,NPO,0402,SMD,TP
片式陶瓷电容,MC,6.3V,10uF,±20%,X5R,0603,SMD,TP
磁珠,120ohm,0402,800mA,SMD,TP,CBM100505U121T,FH
MAIN_SCL_OUT_IC
MAIN_SDA_IO_IC
RT2
RT3
TUNER_SCL_OUT
TUNER_SDA_IO
DT5
DT4
CT4
CT5
NC/?
NC/?
厚膜电阻,1/16W,22ohm,±5%,0402,SMD
厚膜电阻,1/16W,22ohm,±5%,0402,SMD
片式陶瓷电容,MC,50V,22pF,±5%,NPO,0402,SMD,TP
片式陶瓷电容,MC,50V,22pF,±5%,NPO,0402,SMD,TP
TUNER_IF_P_IN
TUNER_IF_N_IN
RT8
PCB短路
NC/0ohm-0402-PCB
RT13
PCB短路
NC/0ohm-0402-PCB
CT7
CT8
CT3
CT9
CT6
CT10
CT26
RT12
PCB短路
NC/0ohm-0402-PCB
RT5
PCB短路
NC/0ohm-0402-PCB
TUNER_IF_P_IN_IC
TUNER_IF_N_IN_IC
NC/片式陶瓷电容,MC,16V,0.1uF,±20%,X5R,0402,SMD,TP
NC/片式陶瓷电容,MC,50V,47pF,±5%,NPO,0402,SMD,TP
NC/片式陶瓷电容,MC,50V,47pF,±5%,NPO,0402,SMD,TP
片式陶瓷电容,MC,16V,0.1uF,±20%,X5R,0402,SMD,TP
片式陶瓷电容,MC,16V,0.1uF,±20%,X5R,0402,SMD,TP
NC/片式陶瓷电容,MC,50V,3.9pF,±0.25pF,NPO,0402,SMD,TP
NC/片式陶瓷电容,MC,50V,3.9pF,±0.25pF,NPO,0402,SMD,TP
TUNER_AGC_OUT_IC
RT1
TUNER_AGC_OUT
CT13
片式陶瓷电容,MC,16V,0.1uF,±20%,X5R,0402,SMD,TP
厚膜电阻,1/16W,10kohm,±5%,0402,SMD
片式陶瓷电容,MC,16V,0.1uF,±20%,X5R,0402,SMD,TP
片式陶瓷电容,MC,50V,1000pF,±10%,X7R,0402,SMD,TP
磁珠,1kohm,0402,300mA,SMD,TP,CBM100505U102T,FH
磁珠,1kohm,0402,300mA,SMD,TP,CBM100505U102T,FH
叠层高频电感,180nH,±5%,0402,SMD,VHF100505HQR18JT,FH
片式陶瓷电容,MC,16V,0.047uF,±10%,X7R,0402,SMD,TP
RF13
RF_INPUT
RF屏蔽罩-F型,H,C1,5Pin,T14.3,CH6.3,H11.8,DIP,RF067-D-F01T3NY,AS
RF14
NC/RF屏蔽罩-IEC型,H,C1,9Pin,T14.5,CH6.3,H11.9,DIP,LHD-196-3,WT
CT18
CT19
DT1
GDT1
LT4
DT2
NC/ESD
厚膜电阻,1/4W,0ohm,±5%,1206,SMD
叠层高频电感,270nH,±5%,0402,SMD,VHF100505HQR27JT,FH
片式陶瓷电容,MC,50V,470pF,±10%,X7R,0402,SMD,TP
开关二极管,DS,200mA,100V,SOT-23,SMD,TP,BAV99,YJ
NC/气体放电管,245~455V,2000A,4.5×3.2×2.7mm,SMD,TP,BC351N,BENCENT
3V3_TUNER
CT14
CT15
LT2
LT3
CT16
CT17
叠层高频电感,270nH,±5%,0402,SMD,VHF100505HQR27JT,FH
叠层高频电感,39nH,±5%,0402,SMD,VHF100505HQ39NJT,FH
片式陶瓷电容,MC,16V,0.022uF,±10%,X7R,0402,SMD,TP
片式陶瓷电容,MC,16V,0.022uF,±10%,X7R,0402,SMD,TP
片式陶瓷电容,MC,16V,0.1uF,±20%,X5R,0402,SMD,TP
硅高频头芯片,QFN-24,SMD,R842,Rafael
UT1
GND
RFIN
RFIN2
TF1
TF2
DECT1
SCL
AVDD
TFH
TFL
GPIO
VBG
DET2
VOP
VON
VAGC
VAGC2
XTAL_O
SDA
CP
DVSS
DVDD
XTAL_I
LT6
LT7
LT8
CT22
CT20
TUNER_IF_P_IN
TUNER_IF_N_IN
TUNER_AGC_OUT
TUNER_XTAL_OUT
TUNER_SCL_OUT
TUNER_SDA_IO
TUNER_XTAL_IN
RT4
CT24
厚膜电阻,1/16W,100ohm,±5%,0402,SMD
片式陶瓷电容,MC,16V,0.1uF,±20%,X5R,0402,SMD,TP
CT29
CT30
RT6
CT32
CT42
片式陶瓷电容,MC,16V,0.1uF,±20%,X5R,0402,SMD,TP
片式陶瓷电容,MC,50V,330pF,±5%,NPO,0402,SMD,TP
片式陶瓷电容,MC,16V,0.1uF,±20%,X5R,0402,SMD,TP
片式陶瓷电容,MC,50V,6800pF,±10%,X7R,0402,SMD,TP
厚膜电阻,1/16W,1.8kohm,±5%,0402,SMD
TUNER_XTAL_IN
CT23
YT1
CT27
TUNER_XTAL_OUT
NC/片式陶瓷电容,MC,50V,6.8pF,±0.25pF,NPO,0402,SMD,TP
NC/片式陶瓷电容,MC,50V,6.8pF,±0.25pF,NPO,0402,SMD,TP
无源晶振,24MHz,±10ppm,12pF,SMD2016,SMD,2.D.1.240001204,MDH
3V3_M
LT61
3V3_TUNER_S
CT61
CT62
CT63
CT64
NC/磁珠,120ohm,0402,800mA,SMD,TP,CBM100505U121T,FH
NC/片式陶瓷电容,MC,6.3V,10uF,±20%,X5R,0603,SMD,TP
NC/片式陶瓷电容,MC,16V,0.1uF,±20%,X5R,0402,SMD,TP
NC/NC/NC/片式陶瓷电容,MC,50V,1000pF,±20%,X7R,0402,SMD,TP
NC/NC/片式陶瓷电容,MC,50V,4.7pF,±0.25pF,NPO,0402,SMD,TP
MAIN_SCL_OUT_IC
MAIN_SDA_IO_IC
RT61
RT62
TUNER_S_SCL_OUT
TUNER_S_SDA_IO
CT40
CT41
NC/厚膜电阻,1/16W,100ohm,±5%,0402,SMD
NC/厚膜电阻,1/16W,100ohm,±5%,0402,SMD
NC/片式陶瓷电容,MC,50V,22pF,±5%,NPO,0402,SMD,TP
NC/片式陶瓷电容,MC,50V,22pF,±5%,NPO,0402,SMD,TP
NC/片式陶瓷电容,MC,16V,10uF,±20%,X5R,0805,SMD,TP
NC/NC/NC/片式陶瓷电容,MC,16V,0.1uF,±20%,X5R,0402,SMD,TP
NC/功率类肖特基二极管,SL1A,40V,SMA,SMD,TP,SS14,JINGDAO
NC/片式陶瓷电容,MC,25V,22uF,±20%,X5R,0805,SMD,TP
NC/NC/片式陶瓷电容,MC,25V,10uF,±10%,X5R,0805,SMD,TP
NC/NC/NC/片式陶瓷电容,MC,25V,0.1uF,±20%,X5R,0402,SMD,TP
NC/功率电感,10uH,1.5A,4×4×3mm,SMD,CKCS4030-10UH/M-9CX-2226,CK
12V
CT102
CT103
LT101
DT101
CT104
CT105
CT106
UT101
VIN
EN
H_L
EXTM
LX
BOOST
VCP
OUT
EPAD
CT107
LNB_PW_EN_IC
LNB_PW_SEL_IC
LNB_DISEQC_OUT_IC
RP7
RZ6
RZ5
RZ4
CT108
DT103
DT104
CT109
CT120
CT43
CT44
LT102
CT21
CT122
CT123
CT124
RT9
DT3
LNB_PW
NC/TEST
NC/片式陶瓷电容,MC,50V,0.1uF,±10%,X7R,0402,SMD,TP
NC/NC/NC/片式陶瓷电容,MC,50V,0.1uF,±10%,X7R,0603,SMD,TP
NC/普通大功率整流二极管,SI,1A,1000V,SMAF,SMD,TP,M7,JINGDAO
NC/普通大功率整流二极管,SI,1A,1000V,SMAF,SMD,TP,M7,JINGDAO
NC/片式陶瓷电容,MC,50V,100pF,±5%,NPO,0402,SMD,TP
NC/片式陶瓷电容,MC,50V,0.1uF,±10%,X7R,0603,SMD,TP
NC/磁珠,120ohm,0603,2A,SMD,TP,HCB1608KF-121T20,TAI-TECH
NC/片式陶瓷电容,MC,50V,100pF,±5%,NPO,0402,SMD,TP
NC/片式陶瓷电容,MC,50V,4.7pF,±0.25pF,NPO,0402,SMD,TP
NC/片式陶瓷电容,MC,50V,100pF,±5%,NPO,0402,SMD,TP
NC/NC/厚膜电阻,1/10W,22kohm,±1%,0603,SMD
NC/片式陶瓷电容,MC,50V,100pF,±5%,NPO,0402,SMD,TP
NC/排阻,RES ARRAY,1/16W,4×100ohm,±5%,0402,SMD,TP
NC/NC/厚膜电阻,1/16W,10kohm,±5%,0402,SMD
NC/NC/厚膜电阻,1/16W,10kohm,±5%,0402,SMD
NC/厚膜电阻,1/16W,10kohm,±5%,0402,SMD
NC/NC/片式陶瓷电容,MC,25V,10uF,±10%,X5R,0805,SMD,TP
NC/功率类TVS管,S,1500W,20V,SMC,SMD,TP,SMCJ20A,YJ
NC/LNB芯片,Non-Syn,9~14V,600mA,1MHz,19V,14V,ESOP-8,SMD,LP6220ASPF,LPS
TUNER_S_IP_IN
TUNER_S_IN_IN
TUNER_S_QN_IN
TUNER_S_QP_IN
CT74
CT75
CT76
CT77
RT65
RT64
RT63
RT62
PCB短路
NC/0ohm-0402-PCB
TUNER_S_IP_IN_IC
TUNER_S_IN_IN_IC
TUNER_S_QN_IN_IC
TUNER_S_QP_IN_IC
CT572
CT573
CT70
CT71
NC/NC/片式陶瓷电容,MC,50V,4.7pF,±0.25pF,NPO,0402,SMD,TP
NC/NC/片式陶瓷电容,MC,50V,4.7pF,±0.25pF,NPO,0402,SMD,TP
TUNER_S_AGC_OUT_IC
RT79
TUNER_S_AGC_OUT
CT86
NC/片式陶瓷电容,MC,16V,0.1uF,±20%,X5R,0402,SMD,TP
NC/厚膜电阻,1/16W,10kohm,±5%,0402,SMD
NC/片式陶瓷电容,MC,16V,0.1uF,±20%,X5R,0402,SMD,TP
NC/片式陶瓷电容,MC,16V,0.1uF,±20%,X5R,0402,SMD,TP
NC/片式陶瓷电容,MC,16V,0.1uF,±20%,X5R,0402,SMD,TP
NC/片式陶瓷电容,MC,16V,0.1uF,±20%,X5R,0402,SMD,TP
LNB_PW
CT92
CT93
NC/片式陶瓷电容,MC,50V,100pF,±5%,NPO,0402,SMD,TP
NC/片式陶瓷电容,MC,50V,100pF,±5%,NPO,0402,SMD,TP
NC/片式陶瓷电容,MC,50V,4.7pF,±0.25pF,NPO,0402,SMD,TP
NC/片式陶瓷电容,MC,16V,0.1uF,±20%,X5R,0402,SMD,TP
NC/片式陶瓷电容,MC,16V,0.1uF,±20%,X5R,0402,SMD,TP
NC/片式陶瓷电容,MC,16V,0.1uF,±20%,X5R,0402,SMD,TP
NC/片式陶瓷电容,MC,50V,47pF,±5%,NPO,0402,SMD,TP
NC/叠层高频电感,22nH,±5%,0402,SMD,VHF100505HQ22NJT,FH
NC/开关二极管,DS,200mA,100V,SOT-23,SMD,TP,BAV99,YJ
NC/叠层高频电感,3.3nH,±0.3nH,0402,SMD
NC/片式陶瓷电容,MC,50V,0.5pF,±0.1pF,NPO,0402,SMD,TP
CT95
TUNER_S_SDA_IO
TUNER_S_SCL_OUT
NC/片式陶瓷电容,MC,50V,4.7pF,±0.25pF,NPO,0402,SMD,TP
NC/片式陶瓷电容,MC,50V,4.7pF,±0.25pF,NPO,0402,SMD,TP
NC/片式陶瓷电容,MC,50V,4.7pF,±0.25pF,NPO,0402,SMD,TP
NC/片式陶瓷电容,MC,50V,4.7pF,±0.25pF,NPO,0402,SMD,TP
RFT7
RFT8
RFT9
LNB_PW
CT94
DT61
CT38
LT65
RT74
UT62
RF_IN
GND
VBAT
SDA
SCLK
EPAD
DET
NC
ADDR
VBG/NC
VDD
CP
XTAL_I
XTAL_O
VAGC
VOP
VON
VONQ
VOPQ
CLK_OUT
TUNER_S_IP_IN
TUNER_S_IN_IN
TUNER_S_QN_IN
TUNER_S_QP_IN
CT96
CT97
CT98
CT66
CT67
CT68
CT69
3V3_TUNER_S
CT99
CT80
RT75
CT88
CT87
TUNER_S_XTAL_IN
TUNER_S_XTAL_OUT
RT76
TUNER_S_AGC_OUT
CT81
CT90
NC/NC/RF屏蔽罩-F型,H,C1,4Pin,T14.5,CH6.3,H10,DIP,RF153A-RDPNCL1Y,ASDZ
NC/NC/?
NC/RF屏蔽罩-F型,H,C1,8Pin,14.4,CH6.3,H10,DIP,FC-024AM,JSL
NC/片式陶瓷电容,MC,6.3V,2.2uF,±20%,X5R,0402,SMD,TP
NC/厚膜电阻,1/16W,3.3kohm,±5%,0402,SMD
NC/片式陶瓷电容,MC,50V,1500pF,±10%,X7R,0402,SMD,TP
NC/片式陶瓷电容,MC,50V,82pF,±5%,NPO,0402,SMD,TP
NC/NC/NC/片式陶瓷电容,MC,50V,4.7pF,±0.25pF,NPO,0402,SMD,TP
NC/硅高频头芯片,QFN-20,SMD,RT720,Rafael
NC/厚膜电阻,1/16W,100ohm,±5%,0402,SMD
NC/片式陶瓷电容,MC,16V,0.1uF,±20%,X5R,0402,SMD,TP
NC/NC/NC/片式陶瓷电容,MC,50V,4.7pF,±0.25pF,NPO,0402,SMD,TP
TUNER_S_XTAL_IN
CT82
YT61
CT83
TUNER_S_XTAL_OUT
NC/NC/片式陶瓷电容,MC,50V,1.2pF,±0.25pF,NPO,0402,SMD,TP
NC/NC/片式陶瓷电容,MC,50V,1.2pF,±0.25pF,NPO,0402,SMD,TP
TUNER_XTAL_IN
RT72
XOUT1
NC/厚膜电阻,1/16W,0ohm,±5%,0402,SMD
TUNER_S_XTAL_IN
RT78
CT1
XOUT1
NC/片式陶瓷电容,MC,16V,0.1uF,±20%,X5R,0402,SMD,TP
NC/厚膜电阻,1/16W,220ohm,±5%,0402,SMD
NC/NC/无源晶振,27MHz,±10ppm,20pF,SMD2016,SMD,2.D.1.270002002,MDH

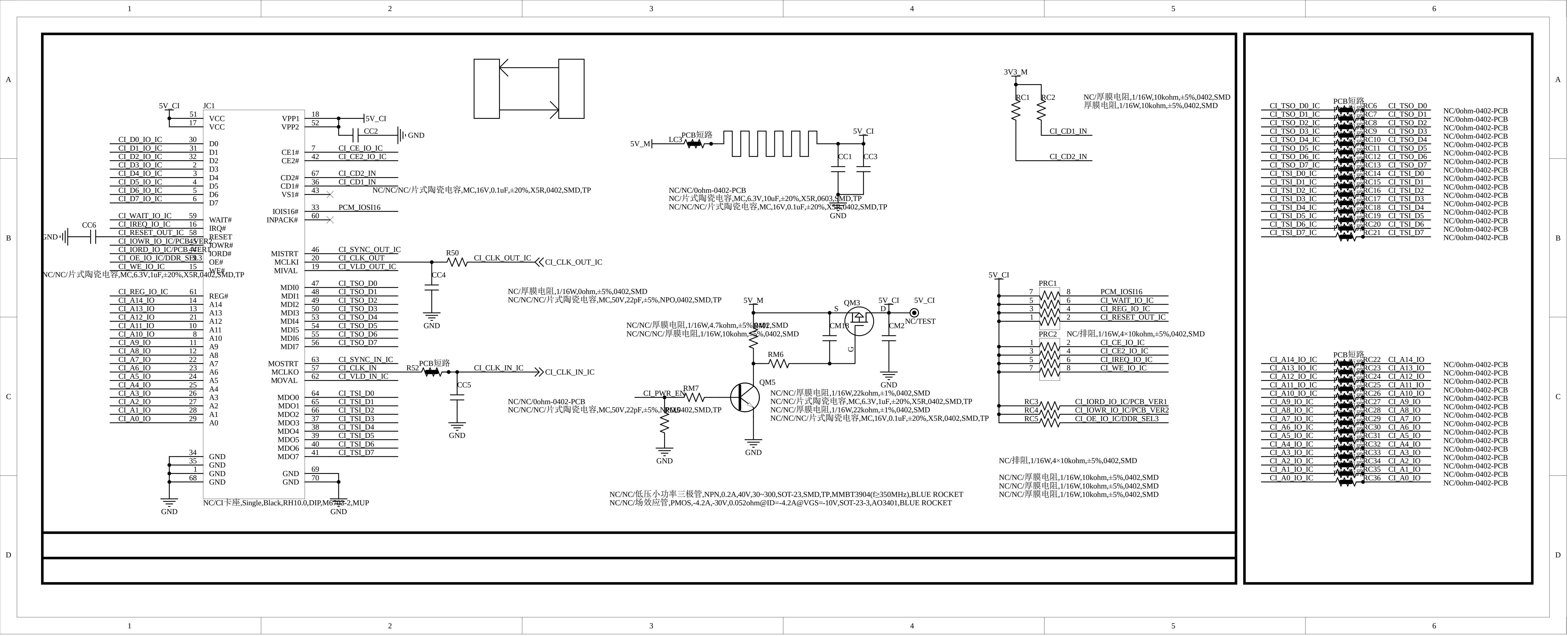

JC1
5V_CI
VCC
VCC
VPP1
VPP2
CE1#
CE2#
CD2#
CD1#
VS1#
IOIS16#
INPACK#
WAIT#
IRQ#
RESET
IOWR#
IORD#
OE#
WE#
REG#
D0 D1 D2 D3 D4 D5 D6 D7
A0 A1 A2 A3 A4 A5 A6 A7 A8 A9 A10 A11 A12 A13 A14
MISTRT
MCLKI
MIVAL
MDI0 MDI1 MDI2 MDI3 MDI4 MDI5 MDI6 MDI7
MOSTRT
MCLKO
MOVAL
MDO0 MDO1 MDO2 MDO3 MDO4 MDO5 MDO6 MDO7
GND
CI_D0_IO_IC
CI_D1_IO_IC
CI_D2_IO_IC
CI_D3_IO_IC
CI_D4_IO_IC
CI_D5_IO_IC
CI_D6_IO_IC
CI_D7_IO_IC
CI_WAIT_IO_IC
CI_IREQ_IO_IC
CI_RESET_OUT_IC
CI_IOWR_IO_IC/PCB_VER2
CI_IORD_IO_IC/PCB_VER1
CI_OE_IO_IC/DDR_SEL3
CI_WE_IO_IC
CI_REG_IO_IC
CI_A14_IO
CI_A13_IO
CI_A12_IO
CI_A11_IO
CI_A10_IO
CI_A9_IO
CI_A8_IO
CI_A7_IO
CI_A6_IO
CI_A5_IO
CI_A4_IO
CI_A3_IO
CI_A2_IO
CI_A1_IO
CI_A0_IO
CC6
GND
NC/NC/片式陶瓷电容,MC,6.3V,1uF,±20%,X5R,0402,SMD,TP
CC2
GND
CI_CE_IO_IC
CI_CE2_IO_IC
CI_CD2_IN
CI_CD1_IN
NC/NC/NC/片式陶瓷电容,MC,16V,0.1uF,±20%,X5R,0402,SMD,TP
PCM_IOSI16
CI_SYNC_OUT_IC
CI_CLK_OUT
CI_VLD_OUT_IC
R50
CI_CLK_OUT_IC
CC4
CI_TSO_D0
CI_TSO_D1
CI_TSO_D2
CI_TSO_D3
CI_TSO_D4
CI_TSO_D5
CI_TSO_D6
CI_TSO_D7
CI_SYNC_IN_IC
CI_CLK_IN
CI_VLD_IN_IC
R52
PCB短路
CI_CLK_IN_IC
CC5
CI_TSI_D0
CI_TSI_D1
CI_TSI_D2
CI_TSI_D3
CI_TSI_D4
CI_TSI_D5
CI_TSI_D6
CI_TSI_D7
NC/CI卡座,Single,Black,RH10.0,DIP,M6793-2,MUP
NC/厚膜电阻,1/16W,0ohm,±5%,0402,SMD
NC/NC/NC/片式陶瓷电容,MC,50V,22pF,±5%,NPO,0402,SMD,TP
NC/NC/0ohm-0402-PCB
NC/NC/NC/片式陶瓷电容,MC,50V,22pF,±5%,NPO,0402,SMD,TP
5V_M
LC3
PCB短路
5V_CI
CC1
CC3
NC/NC/0ohm-0402-PCB
NC/片式陶瓷电容,MC,6.3V,10uF,±20%,X5R,0603,SMD,TP
NC/NC/NC/片式陶瓷电容,MC,16V,0.1uF,±20%,X5R,0402,SMD,TP
3V3_M
RC1
RC2
NC/厚膜电阻,1/16W,10kohm,±5%,0402,SMD
厚膜电阻,1/16W,10kohm,±5%,0402,SMD
CI_CD1_IN
CI_CD2_IN
5V_M
QM3
S
D
G
5V_CI
NC/TEST
CM1B
CM2
NC/厚膜电阻,1/16W,4.7kohm,±5%,0402,SMD
NC/NC/NC/厚膜电阻,1/16W,10kohm,±5%,0402,SMD
RM6
CI_PWR_EN
RM7
RM5
QM5
NC/NC/厚膜电阻,1/16W,22kohm,±1%,0402,SMD
NC/NC/片式陶瓷电容,MC,6.3V,1uF,±20%,X5R,0402,SMD,TP
NC/NC/厚膜电阻,1/16W,22kohm,±1%,0402,SMD
NC/NC/NC/片式陶瓷电容,MC,16V,0.1uF,±20%,X5R,0402,SMD,TP
NC/NC/低压小功率三极管,NPN,0.2A,40V,30~300,SOT-23,SMD,TP,MMBT3904(f≥350MHz),BLUE ROCKET
NC/NC/场效应管,PMOS,-4.2A,-30V,0.052ohm@ID=-4.2A@VGS=-10V,SOT-23-3,AO3401,BLUE ROCKET
5V_CI
PRC1
PCM_IOSI16
CI_WAIT_IO_IC
CI_REG_IO_IC
CI_RESET_OUT_IC
NC/排阻,1/16W,4×10kohm,±5%,0402,SMD
PRC2
CI_CE_IO_IC
CI_CE2_IO_IC
CI_IREQ_IO_IC
CI_WE_IO_IC
RC3
RC4
RC5
CI_IORD_IO_IC/PCB_VER1
CI_IOWR_IO_IC/PCB_VER2
CI_OE_IO_IC/DDR_SEL3
NC/排阻,1/16W,4×10kohm,±5%,0402,SMD
NC/NC/厚膜电阻,1/16W,10kohm,±5%,0402,SMD
NC/NC/厚膜电阻,1/16W,10kohm,±5%,0402,SMD
NC/NC/厚膜电阻,1/16W,10kohm,±5%,0402,SMD
PCB短路
CI_TSO_D0_IC RC6 CI_TSO_D0 NC/0ohm-0402-PCB
CI_TSO_D1_IC RC7 CI_TSO_D1 NC/0ohm-0402-PCB
CI_TSO_D2_IC RC8 CI_TSO_D2 NC/0ohm-0402-PCB
CI_TSO_D3_IC RC9 CI_TSO_D3 NC/0ohm-0402-PCB
CI_TSO_D4_IC RC10 CI_TSO_D4 NC/0ohm-0402-PCB
CI_TSO_D5_IC RC11 CI_TSO_D5 NC/0ohm-0402-PCB
CI_TSO_D6_IC RC12 CI_TSO_D6 NC/0ohm-0402-PCB
CI_TSO_D7_IC RC13 CI_TSO_D7 NC/0ohm-0402-PCB
CI_TSI_D0_IC RC14 CI_TSI_D0 NC/0ohm-0402-PCB
CI_TSI_D1_IC RC15 CI_TSI_D1 NC/0ohm-0402-PCB
CI_TSI_D2_IC RC16 CI_TSI_D2 NC/0ohm-0402-PCB
CI_TSI_D3_IC RC17 CI_TSI_D3 NC/0ohm-0402-PCB
CI_TSI_D4_IC RC18 CI_TSI_D4 NC/0ohm-0402-PCB
CI_TSI_D5_IC RC19 CI_TSI_D5 NC/0ohm-0402-PCB
CI_TSI_D6_IC RC20 CI_TSI_D6 NC/0ohm-0402-PCB
CI_TSI_D7_IC RC21 CI_TSI_D7 NC/0ohm-0402-PCB
PCB短路
CI_A14_IO_IC RC22 CI_A14_IO NC/0ohm-0402-PCB
CI_A13_IO_IC RC23 CI_A13_IO NC/0ohm-0402-PCB
CI_A12_IO_IC RC24 CI_A12_IO NC/0ohm-0402-PCB
CI_A11_IO_IC RC25 CI_A11_IO NC/0ohm-0402-PCB
CI_A10_IO_IC RC26 CI_A10_IO NC/0ohm-0402-PCB
CI_A9_IO_IC RC27 CI_A9_IO NC/0ohm-0402-PCB
CI_A8_IO_IC RC28 CI_A8_IO NC/0ohm-0402-PCB
CI_A7_IO_IC RC29 CI_A7_IO NC/0ohm-0402-PCB
CI_A6_IO_IC RC30 CI_A6_IO NC/0ohm-0402-PCB
CI_A5_IO_IC RC31 CI_A5_IO NC/0ohm-0402-PCB
CI_A4_IO_IC RC32 CI_A4_IO NC/0ohm-0402-PCB
CI_A3_IO_IC RC33 CI_A3_IO NC/0ohm-0402-PCB
CI_A2_IO_IC RC34 CI_A2_IO NC/0ohm-0402-PCB
CI_A1_IO_IC RC35 CI_A1_IO NC/0ohm-0402-PCB
CI_A0_IO_IC RC36 CI_A0_IO NC/0ohm-0402-PCB

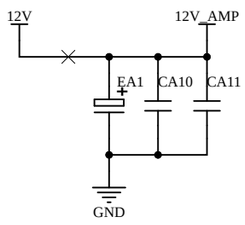


片式陶瓷电容,MC,16V,10uF,±20%,X5R,0805,SMD,TP
片式陶瓷电容,MC,16V,10uF,±20%,X5R,0805,SMD,TP
低压铝电解电容,16V,470uF,±20%,PKRM,P,5.0mm,Φ10×12.5mm,DIP,TR-B,Koshin

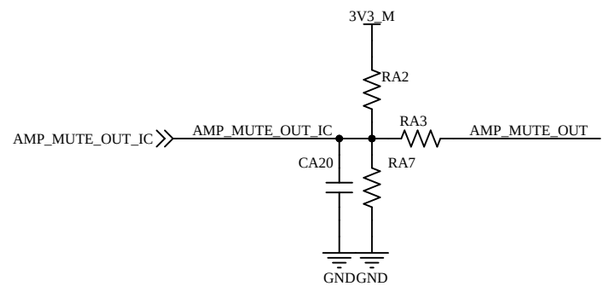


NC/厚膜电阻,1/16W,10kohm,±5%,0402,SMD
厚膜电阻,1/16W,4.7kohm,±5%,0402,SMD
厚膜电阻,1/16W,4.7kohm,±5%,0402,SMD
NC/NC/片式陶瓷电容,MC,16V,1uF,±20%,X5R,0402,SMD,TP

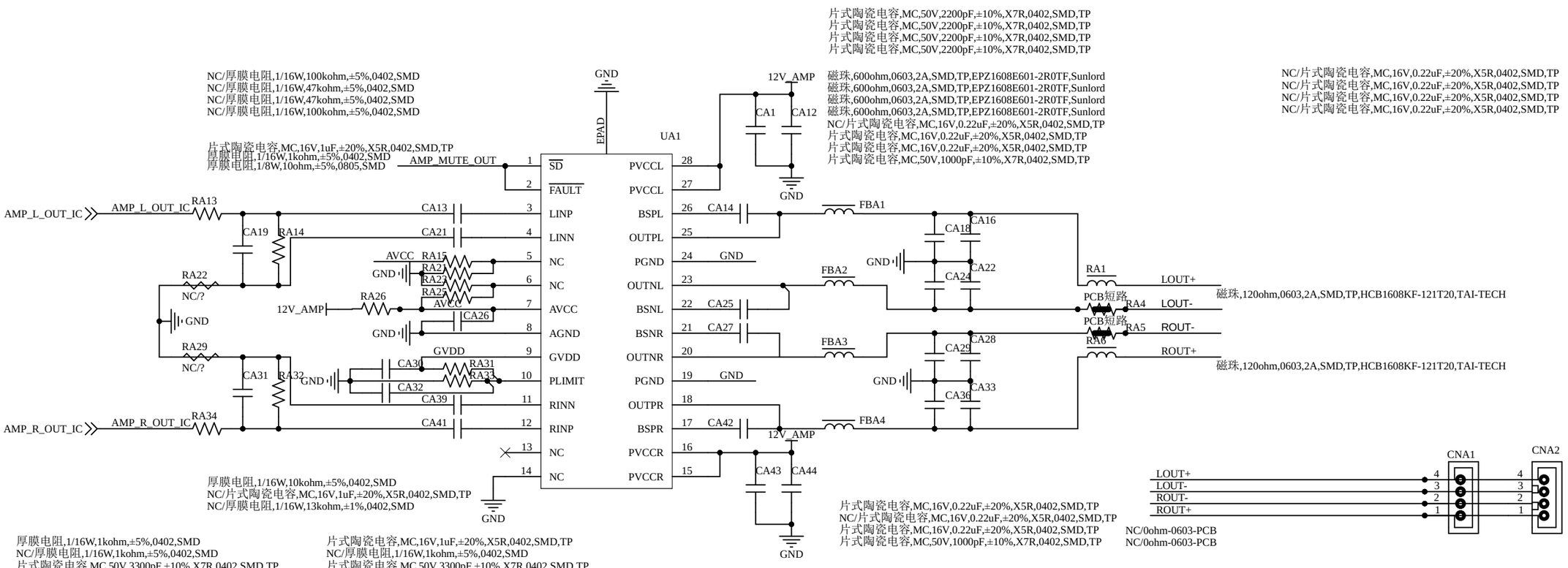


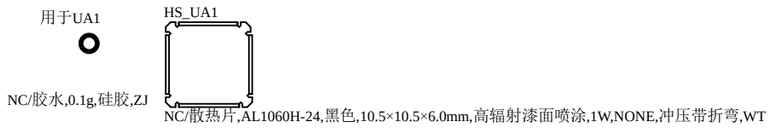


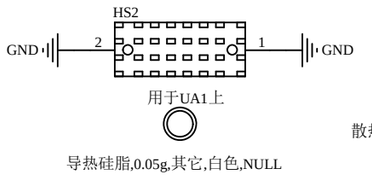


散热片,石墨烯复合材料,灰黑色,28.5×10×7mm,[无需表面处理],4W,DIP PIN,BOSOM

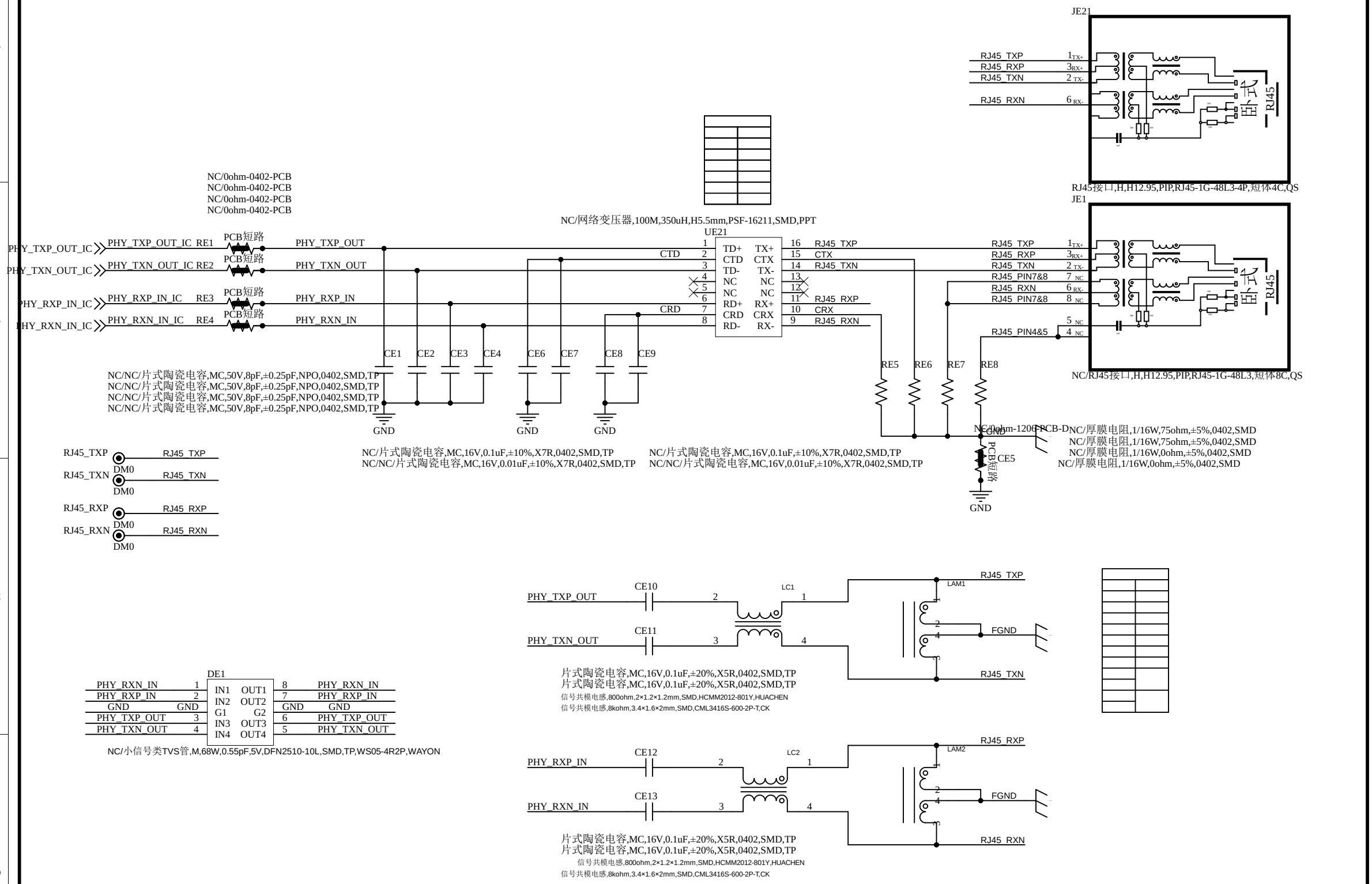
JE21
RJ45_TXP
RJ45_RXP
RJ45_TXN
RJ45_RXN
RJ45
RJ45接口,H,H12.95,PIP,RJ45-1G-48L3-4P,短体4C,QS
JE1
RJ45_PIN7&8
RJ45_PIN4&5
NC/RJ45接口,H,H12.95,PIP,RJ45-1G-48L3,短体8C,QS
NC/0ohm-0402-PCB
NC/0ohm-0402-PCB
NC/0ohm-0402-PCB
NC/0ohm-0402-PCB
NC/网络变压器,100M,350uH,H5.5mm,PSF-16211,SMD,PPT
UE21
PHY_TXP_OUT_IC
PHY_TXN_OUT_IC
PHY_RXP_IN_IC
PHY_RXN_IN_IC
PHY_TXP_OUT_IC RE1
PHY_TXN_OUT_IC RE2
PHY_RXP_IN_IC RE3
PHY_RXN_IN_IC RE4
PCB短路
PHY_TXP_OUT
PHY_TXN_OUT
PHY_RXP_IN
PHY_RXN_IN
CTD
CRD
TD+ TX+
CTD CTX
TD- TX-
NC NC
NC NC
RD+ RX+
CRD CRX
RD- RX-
CTX
CRX
CE1 CE2 CE3 CE4 CE6 CE7 CE8 CE9
NC/NC/片式陶瓷电容,MC,50V,8pF,±0.25pF,NPO,0402,SMD,TP
NC/NC/片式陶瓷电容,MC,50V,8pF,±0.25pF,NPO,0402,SMD,TP
NC/NC/片式陶瓷电容,MC,50V,8pF,±0.25pF,NPO,0402,SMD,TP
NC/NC/片式陶瓷电容,MC,50V,8pF,±0.25pF,NPO,0402,SMD,TP
GND
NC/片式陶瓷电容,MC,16V,0.1uF,±10%,X7R,0402,SMD,TP
NC/NC/片式陶瓷电容,MC,16V,0.01uF,±10%,X7R,0402,SMD,TP
RE5 RE6 RE7 RE8
NC/0ohm-1206-PCB-D
NC/厚膜电阻,1/16W,75ohm,±5%,0402,SMD
NC/厚膜电阻,1/16W,75ohm,±5%,0402,SMD
NC/厚膜电阻,1/16W,0ohm,±5%,0402,SMD
NC/厚膜电阻,1/16W,0ohm,±5%,0402,SMD
CE5
RJ45_TXP
RJ45_TXN
RJ45_RXP
RJ45_RXN
DM0
CE10
CE11
LC1
LAM1
FGND
片式陶瓷电容,MC,16V,0.1uF,±20%,X5R,0402,SMD,TP
片式陶瓷电容,MC,16V,0.1uF,±20%,X5R,0402,SMD,TP
信号共模电感,800ohm,2×1.2×1.2mm,SMD,HCMM2012-801Y,HUACHEN
信号共模电感,8kohm,3.4×1.6×2mm,SMD,CML3416S-600-2P-T,CK
DE1
PHY_RXN_IN
PHY_RXP_IN
GND
PHY_TXP_OUT
PHY_TXN_OUT
IN1 OUT1
IN2 OUT2
G1 G2
IN3 OUT3
IN4 OUT4
NC/小信号类TVS管,M,68W,0.55pF,5V,DFN2510-10L,SMD,TP,WS05-4R2P,WAYON
CE12
CE13
LC2
LAM2

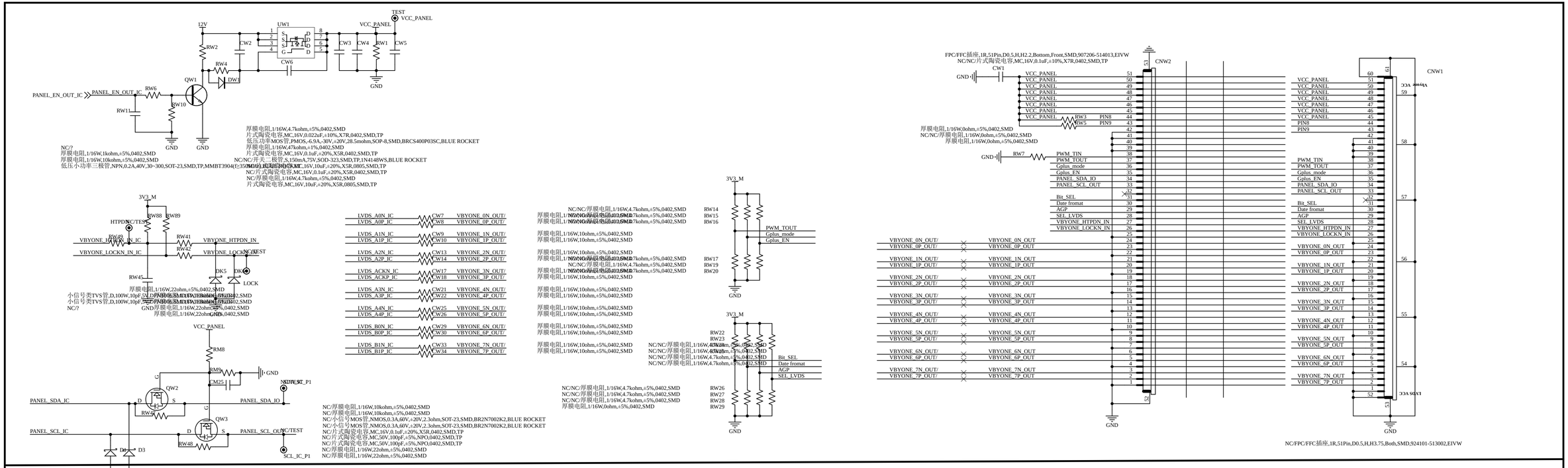
TEST
VCC_PANEL
12V
UW1
VCC_PANEL
RW2
CW2
CW3
CW4
RW1
CW5
RW4
CW6
DW3
QW1
PANEL_EN_OUT_IC
PANEL_EN_OUT_IC
RW6
RW11
RW10
GND
GND
NC/?
厚膜电阻,1/16W,1kohm,±5%,0402,SMD
厚膜电阻,1/16W,10kohm,±5%,0402,SMD
低压小功率三极管,NPN,0.2A,40V,30~300,SOT-23,SMD,TP,MMBT3904(在350MW)
厚膜电阻,1/16W,4.7kohm,±5%,0402,SMD
片式陶瓷电容,MC,16V,0.022uF,±10%,X7R,0402,SMD,TP
低压功率MOS管,PMOS,-6.9A,-30V,±20V,28.5mohm,SOP-8,SMD,BRCS400P03SC,BLUE ROCKET
厚膜电阻,1/16W,47kohm,±1%,0402,SMD
片式陶瓷电容,MC,16V,0.1uF,±20%,X5R,0402,SMD,TP
NC/NC/开关二极管,S,150mA,75V,SOD-323,SMD,TP,1N4148WS,BLUE ROCKET
NC/片式陶瓷电容,MC,16V,10uF,±20%,X5R,0805,SMD,TP
NC/片式陶瓷电容,MC,16V,0.1uF,±20%,X5R,0402,SMD,TP
NC/厚膜电阻,1/16W,4.7kohm,±5%,0402,SMD
片式陶瓷电容,MC,16V,10uF,±20%,X5R,0805,SMD,TP
3V3_M
RW88
RW89
HTPDN_CTEST
RW49
VBYONE_HTPDN_IN_IC
RW41
VBYONE_HTPDN_IN
RW42
VBYONE_LOCKN_IN_IC
VBYONE_LOCKN_TEST
RW45
DK5
DK6
LOCK
厚膜电阻,1/16W,22ohm,±5%,0402,SMD
小信号类TVS管,D,100W,10pF,5V,DFN0603,SMD,TP,DESD05.3XV,BLUE ROCKET
小信号类TVS管,D,100W,10pF,5V,DFN0603,SMD,TP,DESD05.3XV,BLUE ROCKET
NC/?
GND
厚膜电阻,1/16W,22ohm,±5%,0402,SMD
GND
LVDS_A0N_IC
LVDS_A0P_IC
CW7
CW8
VBYONE_0N_OUT/
VBYONE_0P_OUT/
LVDS_A1N_IC
LVDS_A1P_IC
CW9
CW10
VBYONE_1N_OUT/
VBYONE_1P_OUT/
LVDS_A2N_IC
LVDS_A2P_IC
CW13
CW14
VBYONE_2N_OUT/
VBYONE_2P_OUT/
LVDS_ACKN_IC
LVDS_ACKP_IC
CW17
CW18
VBYONE_3N_OUT/
VBYONE_3P_OUT/
LVDS_A3N_IC
LVDS_A3P_IC
CW21
CW22
VBYONE_4N_OUT/
VBYONE_4P_OUT/
LVDS_A4N_IC
LVDS_A4P_IC
CW25
CW26
VBYONE_5N_OUT/
VBYONE_5P_OUT/
LVDS_B0N_IC
LVDS_B0P_IC
CW29
CW30
VBYONE_6N_OUT/
VBYONE_6P_OUT/
LVDS_B1N_IC
LVDS_B1P_IC
CW33
CW34
VBYONE_7N_OUT/
VBYONE_7P_OUT/
NC/NC/厚膜电阻,1/16W,4.7kohm,±5%,0402,SMD
厚膜电阻,1/16W,4.7kohm,±5%,0402,SMD
厚膜电阻,1/16W,4.7kohm,±5%,0402,SMD
RW14
RW15
RW16
厚膜电阻,1/16W,10ohm,±5%,0402,SMD
厚膜电阻,1/16W,10ohm,±5%,0402,SMD
厚膜电阻,1/16W,10ohm,±5%,0402,SMD
厚膜电阻,1/16W,4.7kohm,±5%,0402,SMD
NC/NC/厚膜电阻,1/16W,4.7kohm,±5%,0402,SMD
厚膜电阻,1/16W,4.7kohm,±5%,0402,SMD
RW17
RW19
RW20
厚膜电阻,1/16W,10ohm,±5%,0402,SMD
厚膜电阻,1/16W,10ohm,±5%,0402,SMD
厚膜电阻,1/16W,10ohm,±5%,0402,SMD
厚膜电阻,1/16W,10ohm,±5%,0402,SMD
厚膜电阻,1/16W,10ohm,±5%,0402,SMD
厚膜电阻,1/16W,10ohm,±5%,0402,SMD
厚膜电阻,1/16W,10ohm,±5%,0402,SMD
厚膜电阻,1/16W,10ohm,±5%,0402,SMD
3V3_M
PWM_TOUT
Gplus_mode
Gplus_EN
GND
3V3_M
RW22
RW23
RW24
RW25
RW26
RW27
RW28
RW29
Bit_SEL
Date fromat
AGP
SEI_LVDS
GND
NC/NC/厚膜电阻,1/16W,4.7kohm,±5%,0402,SMD
NC/NC/厚膜电阻,1/16W,4.7kohm,±5%,0402,SMD
NC/NC/厚膜电阻,1/16W,4.7kohm,±5%,0402,SMD
厚膜电阻,1/16W,0ohm,±5%,0402,SMD
VCC_PANEL
RM8
RM9
CM25
GND
NC/TEST_P1
QW2
PANEL_SDA_IC
PANEL_SDA_IO
RW46
QW3
PANEL_SCL_IC
PANEL_SCL_OUT
NC/TEST
RW48
D2
D3
SCL_IC_P1
GND
NC/厚膜电阻,1/16W,10kohm,±5%,0402,SMD
NC/厚膜电阻,1/16W,10kohm,±5%,0402,SMD
NC/小信号MOS管,NMOS,0.3A,60V,±20V,2.3ohm,SOT-23,SMD,BR2N7002K2,BLUE ROCKET
NC/小信号MOS管,NMOS,0.3A,60V,±20V,2.3ohm,SOT-23,SMD,BR2N7002K2,BLUE ROCKET
NC/片式陶瓷电容,MC,16V,0.1uF,±20%,X5R,0402,SMD,TP
NC/片式陶瓷电容,MC,50V,100pF,±5%,NPO,0402,SMD,TP
NC/片式陶瓷电容,MC,50V,100pF,±5%,NPO,0402,SMD,TP
NC/厚膜电阻,1/16W,22ohm,±5%,0402,SMD
NC/厚膜电阻,1/16W,22ohm,±5%,0402,SMD
FPC/FFC插座,1R,51Pin,D0.5,H,H2.2,Bottom,Front,SMD,907206-514013,EIVW
NC/NC/片式陶瓷电容,MC,16V,0.1uF,±10%,X7R,0402,SMD,TP
CW1
GND
CNW2
VCC_PANEL
RW3
RW5
PIN8
PIN9
厚膜电阻,1/16W,0ohm,±5%,0402,SMD
NC/NC/厚膜电阻,1/16W,0ohm,±5%,0402,SMD
厚膜电阻,1/16W,0ohm,±5%,0402,SMD
GND
RW7
PWM_TIN
PWM_TOUT
Gplus_mode
Gplus_EN
PANEL_SDA_IO
PANEL_SCL_OUT
Bit_SEL
Date fromat
AGP
SEI_LVDS
VBYONE_HTPDN_IN
VBYONE_LOCKN_IN
VBYONE_0N_OUT/
VBYONE_0P_OUT/
VBYONE_1N_OUT/
VBYONE_1P_OUT/
VBYONE_2N_OUT/
VBYONE_2P_OUT/
VBYONE_3N_OUT/
VBYONE_3P_OUT/
VBYONE_4N_OUT/
VBYONE_4P_OUT/
VBYONE_5N_OUT/
VBYONE_5P_OUT/
VBYONE_6N_OUT/
VBYONE_6P_OUT/
VBYONE_7N_OUT/
VBYONE_7P_OUT/
VBYONE_0N_OUT
VBYONE_0P_OUT
VBYONE_1N_OUT
VBYONE_1P_OUT
VBYONE_2N_OUT
VBYONE_2P_OUT
VBYONE_3N_OUT
VBYONE_3P_OUT
VBYONE_4N_OUT
VBYONE_4P_OUT
VBYONE_5N_OUT
VBYONE_5P_OUT
VBYONE_6N_OUT
VBYONE_6P_OUT
VBYONE_7N_OUT
VBYONE_7P_OUT
GND
CNW1
VCC_PANEL
PIN8
PIN9
PWM_TIN
PWM_TOUT
Gplus_mode
Gplus_EN
PANEL_SDA_IO
PANEL_SCL_OUT
Bit_SEL
Date fromat
AGP
SEI_LVDS
VBYONE_HTPDN_IN
VBYONE_LOCKN_IN
VBYONE_0N_OUT
VBYONE_0P_OUT
VBYONE_1N_OUT
VBYONE_1P_OUT
VBYONE_2N_OUT
VBYONE_2P_OUT
VBYONE_3N_OUT
VBYONE_3P_OUT
VBYONE_4N_OUT
VBYONE_4P_OUT
VBYONE_5N_OUT
VBYONE_5P_OUT
VBYONE_6N_OUT
VBYONE_6P_OUT
VBYONE_7N_OUT
VBYONE_7P_OUT
VCC_PANEL
LVDS_VCC
GND
NC/FPC/FFC插座,1R,51Pin,D0.5,H,H3.75,Both,SMD,924101-513002,EIVW